PROPOSED COPE WAREHOUSE DEVELOPMENT
LUDDENHAM ROAD, ORCHARD HILLS NSW
CIVIL ENGINEERING WORKS

GENERAL NOTES:

1. ALL WORK TO BE CARRIED OUT IN ACCORDANCE WITH PENRITH CITY COUNCIL SPECIFICATION. CONTRACTOR TO OBTAIN AND RETAIN A COPY ON SITE DURING THE COURSE OF THE WORKS.
2. ALL NEW WORKS ARE TO MAKE A SMOOTH JUNCTION WITH EXISTING CONDITIONS AND MARRY IN A 'WORKMANLIKE' MANNER.
3. THE CONTRACTOR IS TO VERIFY THE LOCATION OF ALL SERVICES WITH EACH RELEVANT AUTHORITY. ANY DAMAGE TO SERVICES SHALL BE RECTIFIED BY THE CONTRACTOR OR THE RELEVANT AUTHORITY AT THE CONTRACTOR'S EXPENSE. SERVICES SHOWN ON THESE PLANS ARE ONLY THOSE EVIDENT AT THE TIME OF SURVEY OR AS DETERMINED FROM SERVICE DIAGRAMS. H & H CONSULTING ENGINEERS PTY. LTD CANNOT GUARANTEE THE INFORMATION SHOWN NOR ACCEPT ANY RESPONSIBILITY FOR INACCURACIES OR INCOMPLETE DATA.
4. SERVICES & ACCESSES TO THE EXISTING PROPERTIES ARE TO BE MAINTAINED IN WORKING ORDER AT ALL TIMES DURING CONSTRUCTION.
5. ADJUST EXISTING SERVICE COVERS TO SUIT NEW FINISHED LEVELS TO RELEVANT AUTHORITY REQUIREMENTS WHERE NECESSARY.
6. REINSTATE AND STABILISE ALL DISTURBED LANDSCAPED AREAS.
7. MINIMUM GRADE OF SUBSOIL SHALL BE 0.5% (1:200) FALL TO OUTLETS.
8. ALL TEMPORARY SEDIMENT AND EROSION CONTROL DEVICES ARE TO BE CONSTRUCTED, PLACED AND MAINTAINED IN ACCORDANCE WITH THE TECHNICAL SPECIFICATIONS, EROSION AND SEDIMENTATION CONTROL PLAN AND PENRITH CITY COUNCIL REQUIREMENTS WHERE APPLICABLE.
9. CONTRACTOR TO CHECK AND CONFIRM SITE DRAINAGE CONNECTIONS ACROSS THE VERGE PRIOR TO COMMENCEMENT OF SITE DRAINAGE WORKS.
10. PROPERTIES AFFECTED BY THE WORKS ARE TO BE NOTIFIED IN ADVANCE WHERE DISRUPTION TO EXISTING ACCESS IS LIKELY.

EXISTING SERVICES & FEATURES

- THE CONTRACTOR SHALL ALLOW FOR THE CAPPING OFF, EXCAVATION AND REMOVAL (IF REQUIRED) OF ALL EXISTING SERVICES IN AREAS AFFECTED BY WORKS WITHIN THE CONTRACT AREA OR AS SHOWN ON THE DRAWINGS UNLESS DIRECTED OTHERWISE BY THE SUPERINTENDENT.
- THE CONTRACTOR SHALL ENSURE THAT AT ALL TIMES SERVICES TO ALL BUILDINGS NOT AFFECTED BY THE WORKS ARE NOT DISRUPTED.
- PRIOR TO COMMENCEMENT OF ANY WORKS THE CONTRACTOR SHALL GAIN APPROVAL OF HIS PROGRAM FOR THE RELOCATION/ CONSTRUCTION OF TEMPORARY SERVICES.
- CONTRACTOR SHALL CONSTRUCT TEMPORARY SERVICES TO MAINTAIN SUPPLY TO EXISTING BUILDING REMAINING IN OPERATION DURING WORKS TO THE SATISFACTION AND APPROVAL OF THE SUPERINTENDENT. ONCE DIVERSION IS COMPLETE AND COMMISSIONED, THE CONTRACTOR SHALL REMOVE ALL SUCH TEMPORARY SERVICES AND MAKE GOOD TO THE SATISFACTION OF THE SUPERINTENDENT.
- INTERRUPTION TO SUPPLY OF EXISTING SERVICES SHALL BE DONE SO AS NOT TO CAUSE ANY INCONVENIENCE TO THE PRINCIPAL. CONTRACTOR TO GAIN APPROVAL FROM THE SUPERINTENDENT FOR TIME OF INTERRUPTION.
- EXISTING SERVICES, BUILDINGS, EXTERNAL STRUCTURES AND TREES SHOWN ON THESE DRAWINGS ARE EXISTING FEATURES PRIOR TO ANY DEMOLITION WORKS.
- EXISTING SERVICES UNLESS SHOWN ON SURVEY PLAN HAVE BEEN PLOTTED FROM SERVICES SEARCH PLANS AND AS SUCH THEIR ACCURACY CANNOT BE GUARANTEED. IT IS THE RESPONSIBILITY OF THE CONTRACTOR TO COMPLETE A 'DIAL BEFORE YOU DIG' SEARCH AND TO ESTABLISH THE LOCATION AND LEVEL OF ALL EXISTING SERVICES PRIOR TO THE COMMENCEMENT OF ANY WORK. ANY DISCREPANCIES SHALL BE REPORTED TO THE SUPERINTENDENT. CLEARANCES SHALL BE OBTAINED FROM THE RELEVANT SERVICE AUTHORITY.
- ALL BRANCH GAS AND WATER SERVICES UNDER DRIVEWAYS AND BRICK PAVING SHALL BE LOCATED IN Ø80 uPVC SEWER GRADE CONDUITS EXTENDING A MINIMUM OF 500mm BEYOND EDGE OF PAVING.

LOCALITY SKETCH

SCALE: N.T.S.

DRAWING SCHEDULE

231559_DA_C000	COVER SHEET, DRAWING SCHEDULE, NOTES AND LOCALITY SKETCH
231559_DA_C100	GENERAL ARRANGEMENT PLAN
231559_DA_C101	DETAIL PLAN - SHEET 1 OF 2
231559_DA_C102	DETAIL PLAN - SHEET 2 OF 2
231559_DA_C200	STORMWATER MISCELLANEOUS DETAILS AND PIT LID SCHEDULE
231559_DA_C201	OSD TANK PLAN AND DETAILS - SHEET 1 OF 2
231559_DA_C202	OSD TANK PLAN AND DETAILS - SHEET 2 OF 2
231559_DA_C210	STORMWATER LONGITUDINAL SECTIONS - SHEET 1 OF 2
231559_DA_C211	STORMWATER LONGITUDINAL SECTIONS - SHEET 2 OF 2
231559_DA_C250	STORMWATER CATCHMENT PLAN
231559_DA_SE01	SEDIMENT AND EROSION CONTROL PLAN
231559_DA_SE02	SEDIMENT AND EROSION CONTROL DETAILS
231559_DA_BE01	BULK EARTHWORKS CUT AND FILL PLAN

SITEWORKS NOTES

- DATUM : A.H.D.
- ORIGIN OF LEVELS : REFER TO BENCH OR STATE SURVEY MARKS WHERE SHOWN ON PLAN.
- CONTRACTOR MUST VERIFY ALL DIMENSIONS AND EXISTING LEVELS ON SITE PRIOR TO THE COMMENCEMENT OF WORK.
- ALL WORKS TO BE UNDERTAKEN IN ACCORDANCE WITH THE DETAILS SHOWN ON THE DRAWINGS & THE DIRECTIONS OF THE SUPERINTENDENT.
- EXISTING SERVICES UNLESS SHOWN ON THE SURVEY PLAN HAVE BEEN PLOTTED FROM SERVICES SEARCH PLANS AND AS SUCH THEIR ACCURACY CANNOT BE GUARANTEED. IT IS THE RESPONSIBILITY OF THE CONTRACTOR TO ESTABLISH THE LOCATION AND LEVEL OF ALL EXISTING SERVICES PRIOR TO THE COMMENCEMENT OF ANY WORK. ANY DISCREPANCIES SHALL BE REPORTED TO THE SUPERINTENDENT. CLEARANCES SHALL BE OBTAINED FROM THE RELEVANT SERVICE AUTHORITY.
- WHERE NEW WORKS ABUT EXISTING THE CONTRACTOR SHALL ENSURE THAT A SMOOTH EVEN PROFILE, FREE FROM ABRUPT CHANGES IS ACHIEVED.
- THE CONTRACTOR SHALL ARRANGE ALL SURVEY SETOUT TO BE CARRIED OUT BY A REGISTERED SURVEYOR.
- CARE IS TO BE TAKEN WHEN EXCAVATING NEAR EXISTING SERVICES. NO MECHANICAL EXCAVATION IS TO BE UNDERTAKEN OVER TELSTRA OR ELECTRICAL SERVICES. HAND EXCAVATE IN THESE AREAS.
- CONTRACTOR TO OBTAIN AUTHORITY APPROVALS WHERE APPLICABLE.
- MAKE SMOOTH TRANSITION TO EXISTING SURFACES AND MAKE GOOD.
- THESE PLANS SHALL BE READ IN CONJUNCTION WITH APPROVED LANDSCAPE, ARCHITECTURAL, STRUCTURAL, HYDRAULIC AND MECHANICAL DRAWINGS AND SPECIFICATIONS OR WRITTEN INSTRUCTIONS THAT MAY BE ISSUED RELATING TO DEVELOPMENT AT THE SITE.
- TRENCHES THROUGH EXISTING ROAD AND CONCRETE PAVEMENTS SHALL BE SAWCUT TO FULL DEPTH OF CONCRETE AND A MINIMUM OF 50mm IN BITUMINOUS PAVING.
- ALL BRANCH GAS AND WATER SERVICES UNDER DRIVEWAYS AND BRICK PAVING SHALL BE LOCATED IN Ø80 uPVC SEWER GRADE CONDUITS EXTENDING A MINIMUM OF 500mm BEYOND EDGE OF PAVING.
- GRADES TO PAVEMENTS TO BE AS IMPLIED BY RL'S ON PLAN . GRADE EVENLY BETWEEN NOMINATED RL'S. AREAS EXHIBITING PONDING GREATER THAN 5mm DEPTH WILL NOT BE ACCEPTED UNLESS IN A DESIGNATED SAG POINT.
- ALL COVERS AND GRATES ETC TO EXISTING SERVICE UTILITIES ARE TO BE ADJUSTED TO SUIT NEW FINISHED SURFACE LEVELS WHERE APPLICABLE.

SURVEY NOTES

THE EXISTING SITE CONDITIONS SHOWN ON THE FOLLOWING DRAWINGS HAVE BEEN INVESTIGATED BY THE SURVEYOR SPECIFIED IN THE TITLE BLOCK.
THE INFORMATION IS SHOWN TO PROVIDE A BASIS FOR DESIGN. HENRY AND HYMAS PTY. LTD. DOES NOT GUARANTEE THE ACCURACY OR COMPLETENESS OF THE SURVEY BASE OR ITS SUITABILITY AS A BASIS FOR CONSTRUCTION DRAWINGS.
SHOULD DISCREPANCIES BE ENCOUNTERED DURING CONSTRUCTION BETWEEN THE SURVEY DATA AND ACTUAL FIELD DATA, CONTACT HENRY AND HYMAS PTY. LTD. THE FOLLOWING NOTES HAVE BEEN TAKEN DIRECTLY FROM ORIGINAL SURVEY DOCUMENTS.

FOR DA ONLY

SURVEY INFORMATION
SURVEYED BY
WATSDON BUCHAN
DATUM: A.H.D.
ORIGIN OF LEVELS: SSM 22740 RL41.10

REVISION	AMENDMENT	DRAWN	DESIGNED	DATE	REVISION	AMENDMENT	DRAWN	DESIGNED	DATE
03	ISSUED FOR DA ONLY	MP	NH	16.02.2024					
02	ISSUED FOR DA ONLY	MP	NH	13.11.2023					
01	PRELIMINARY	MB	NH	16.10.2023					

Client
HBB PROPERTY

Architect
nettletontribe

This drawing and design remains the property of Henry & Hymas and may not be copied in whole or in part without the prior written approval of Henry & Hymas.

Suite 2.01
828 Pacific Highway
Gordon NSW 2072
Telephone +61 2 9417 8400
Facsimile +61 2 9417 8337
Email email@hhconsult.com.au
Web www.henryandhymas.com.au

DRAWING TO BE PRINTED IN COLOUR

henry&hymas

Project
PROPOSED COPE WAREHOUSE DEVELOPMENT
LUDDENHAM ROAD, ORCHARD HILLS NSW 2748

Title
COVER SHEET, DRAWING SCHEDULE, NOTES AND LOCALITY SKETCH

Drawn	Designed	Date
M.Barrozo	N.Heazlewood	OCTOBER 2023
Checked	Approved	Scale @A1
N.Heazlewood	A.Francis	N.T.S.

Drawing number: 231559_DA_C000
Revision: 03

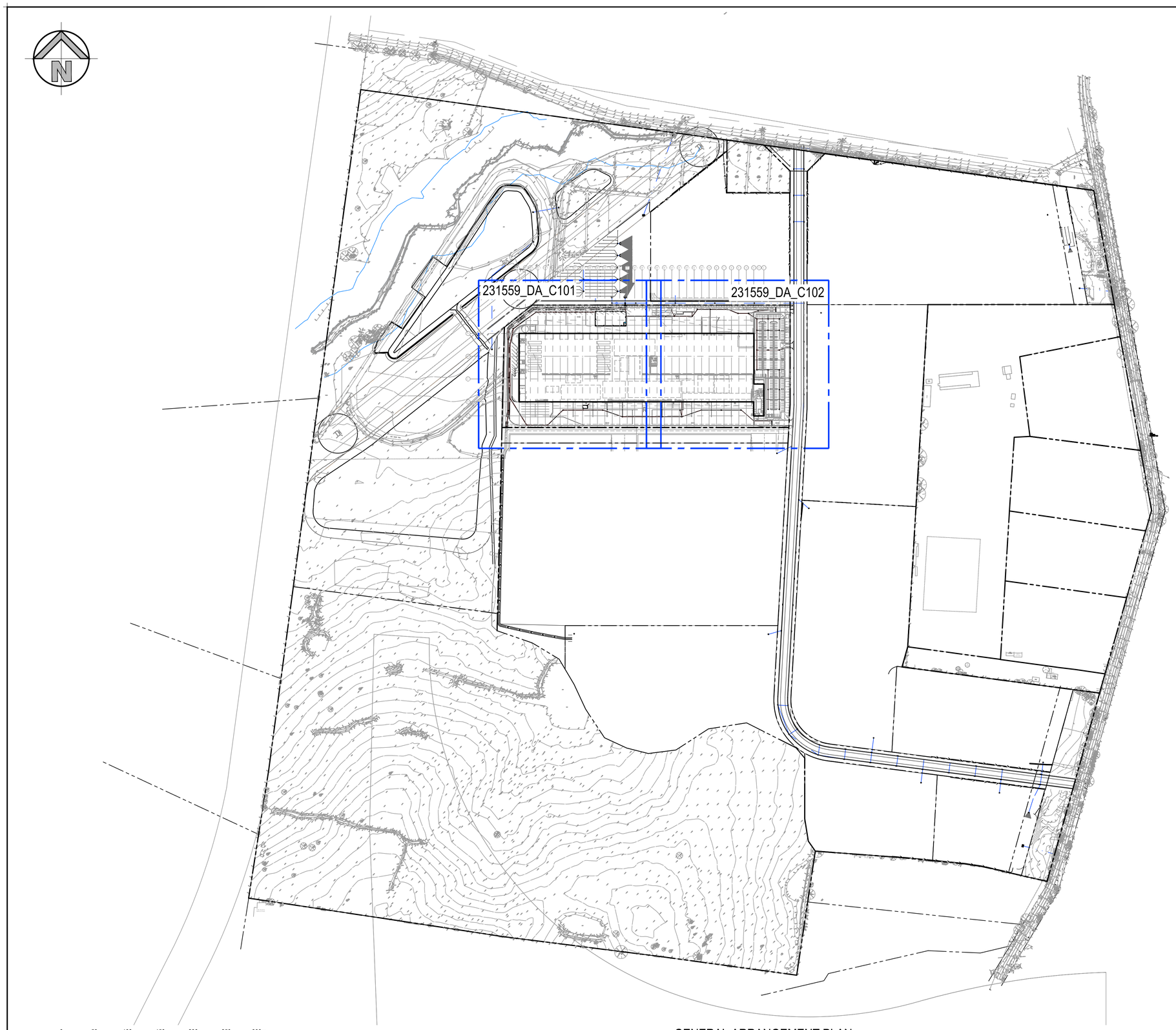

GENERAL ARRANGEMENT PLAN

SCALE: 1:3000

LEGEND

- PROPOSED BOUNDARY
- R — PROPOSED RIDGE LINE
- V — PROPOSED VALLEY LINE
- SS — SS — PROPOSED SUBSOIL LINE
- PROPOSED STORMWATER PIPE
- SUBDIVISION STORMWATER PIPE
- IL97.19 — STORMWATER UPSTREAM INVERT RL.
- Ø300 — STORMWATER PIPE DIAMETER & CLASS
- 30m — STORMWATER PIPE LENGTH
- 1% — STORMWATER PIPE GRADE
- IL96.89 — STORMWATER DOWNSTREAM INVERT RL.
- PROPOSED SURFACE INLET PITS
- PROPOSED JUNCTION PITS
- PROPOSED LINTEL ONGRADE & SAG PITS
- A-1 — LINE LETTER, PIT NUMBER — PROPOSED PIT TAG
- PROPOSED BATTER LINE
- KO — PROPOSED KERB ONLY
- RW — PROPOSED RETAINING WALL
- 47.00 — PROPOSED CONTOURS
- 47.0 — EXISTING CONTOURS
- RL72.50 — PROPOSED SPOT LEVEL
- TW42.20 — TOP OF WALL LEVEL
- BW38.95 — BOTTOM OF WALL LEVEL
- 36.55 — EXISTING SPOT LEVEL
- PROPOSED EASEMENT
- 4.2% — PROPOSED FALL
- H=3.10m — PROPOSED HEIGHT OF WALL
- IR — PROPOSED INTERMEDIATE RISER (IR)
- FP — PROPOSED FLUSHING POINT (FP)
- DP — PROPOSED DOWNPIPE (DP)
- PROPOSED HEADWALL
- PROPOSED SEDIMENT BASIN
- SW — SW — EXISTING STORMWATER
- W — W — EXISTING WATER LINE
- E — E — EXISTING ELECTRICAL LINE
- G — G — EXISTING GAS LINE
- S — S — EXISTING SEWER LINE

FOR DA ONLY

SURVEY INFORMATION
SURVEYED BY
WATSDON BUCHAN
DATUM: A.H.D.
ORIGIN OF LEVELS: SSM 22740 RL41.10

REVISION	AMENDMENT	DRAWN	DESIGNED	DATE	REVISION	AMENDMENT	DRAWN	DESIGNED	DATE
05	ISSUED FOR DA ONLY	NH	NH	15.01.2025					
04	ISSUED FOR DA ONLY	MP	NH	16.02.2024					
03	ISSUED FOR DA ONLY	AFe	NH	05.12.2023					
02	ISSUED FOR DA ONLY	MP	NH	13.11.2023					
01	PRELIMINARY	MB	NH	16.10.2023					

Client
HBB PROPERTY

Architect
nettletontribe

This drawing and design remains the property of Henry & Hymas and may not be copied in whole or in part without the prior written approval of Henry & Hymas.

Suite 2.01
828 Pacific Highway
Gordon NSW 2072
GCNSW | Global Mark.com.au®
Telephone +61 2 9417 8400
Facsimile +61 2 9417 8337
Email email@hhconsult.com.au
Web www.henryandhymas.com.au
henry&hymas

DRAWING TO BE PRINTED IN COLOUR

Project
PROPOSED COPE WAREHOUSE DEVELOPMENT
LUDDENHAM ROAD, ORCHARD HILLS NSW 2748

Title
GENERAL ARRANGEMENT PLAN

Drawn	Designed	Original issue date
M.Barrozo	N.Heazlewood	OCTOBER 2023
Checked	Approved	Scale @A1
N.Heazlewood	A.Francis	1:3000

Drawing number: 231559_DA_C100
Revision: 05

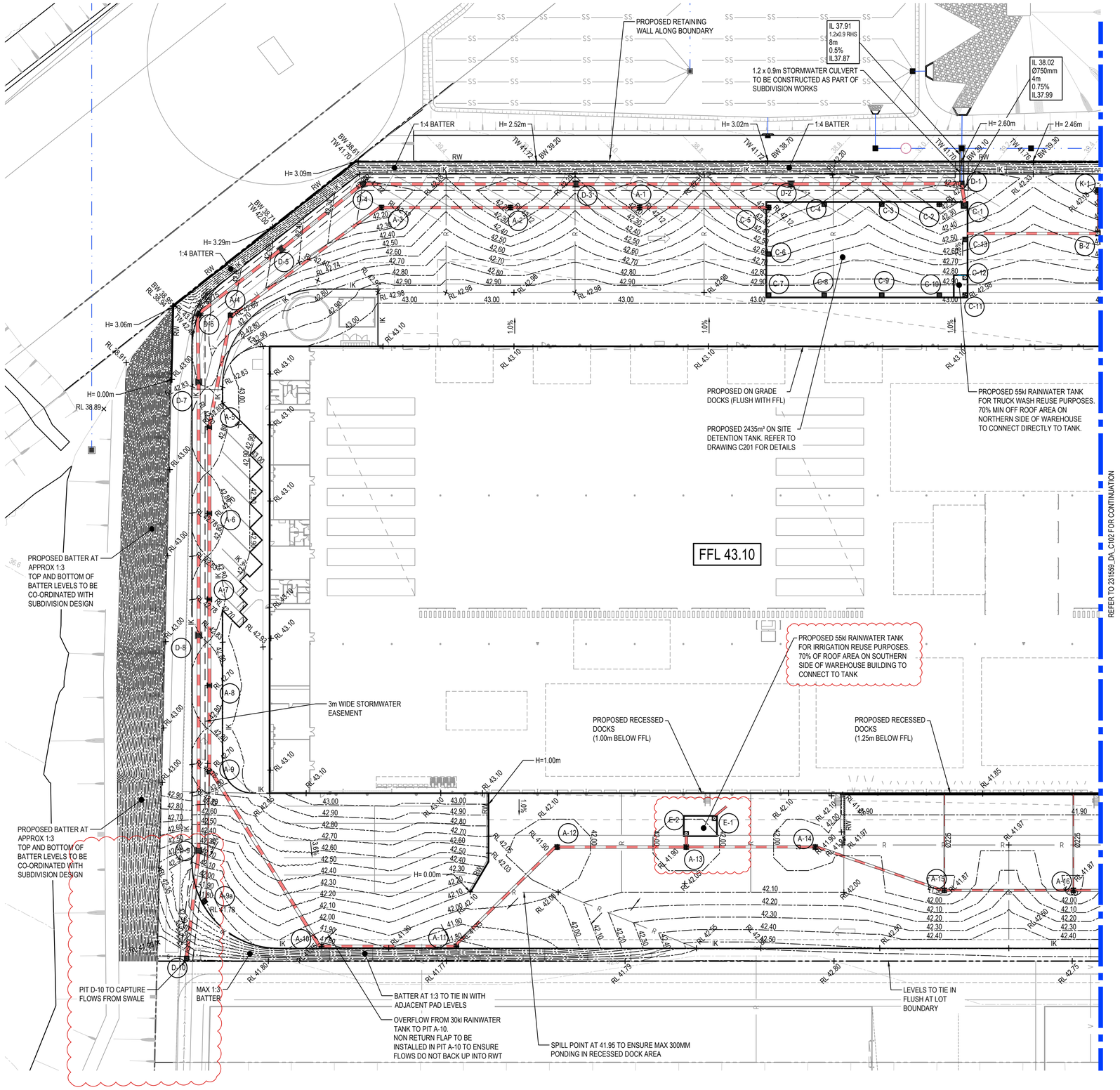

0 10 20 30 40 50m
10 8 6 4 2
SCALE 1:500

DETAIL PLAN

SCALE: 1:500

FOR DA ONLY

SURVEY INFORMATION
SURVEYED BY WATSDON BUCHAN
DATUM: A.H.D.
ORIGIN OF LEVELS: SSM 22740 RL41.10

REVISION	AMENDMENT	DRAWN	DESIGNED	DATE
07	ISSUED FOR DA ONLY	NH	NH	07.11.2024
06	ISSUED FOR DA ONLY	MB	NH	11.09.2024
05	ISSUED FOR DA ONLY	MP	NH	16.02.2024
04	ISSUED FOR DA ONLY	AFe	NH	05.12.2023
03	ISSUED FOR DA ONLY	MP	NH	13.11.2023
02	PRELIMINARY	NH	NH	16.10.2023
01	ISSUED FOR CO-ORDINATION	NH	NH	12.10.2023

REVISION	AMENDMENT	DRAWN	DESIGNED	DATE
10	ISSUED FOR DA ONLY	NH	NH	15.01.2025
09	ISSUED FOR DA ONLY	NH	NH	19.12.2024
08	ISSUED FOR DA ONLY	NH	NH	18.12.2024

Client
HBB PROPERTY

Architect
nettletontribe

This drawing and design remains the property of Henry & Hymas and may not be copied in whole or in part without the prior written approval of Henry & Hymas.

Suite 2.01
828 Pacific Highway
Gordon NSW 2072

Telephone +61 2 9417 8400
Facsimile +61 2 9417 8337
Email email@hhconsult.com.au
Web www.henryandhymas.com.au

DRAWING TO BE PRINTED IN COLOUR

henry&hymas

Project
PROPOSED COPE WAREHOUSE DEVELOPMENT
LUDDENHAM ROAD, ORCHARD HILLS NSW 2748

Title
DETAIL PLAN
SHEET 1 OF 2

Drawn	Designed	Date
M.Barrozo	N.Heazlewood	OCTOBER 2023
Checked	Approved	Scale @A1
N.Heazlewood	A.Francis	1:500

Drawing number: 231559_DA_C101

Revision: 10

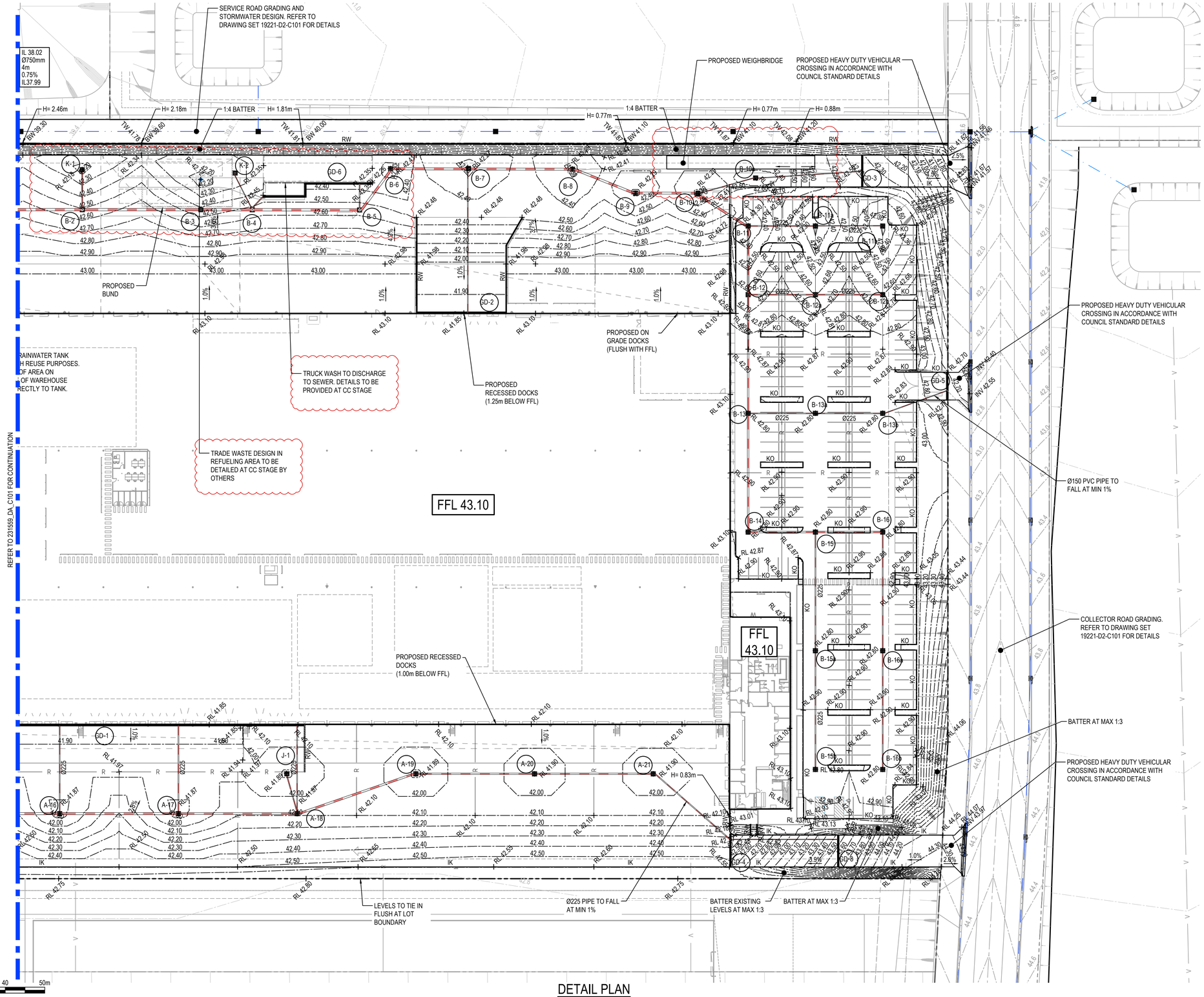

DETAIL PLAN

SCALE: 1:500

FOR DA ONLY

SURVEY INFORMATION
SURVEYED BY WATSDON BUCHAN
DATUM: A.H.D.
ORIGIN OF LEVELS: SSM 22740 RL41.10

REVISION	AMENDMENT	DRAWN	DESIGNED	DATE
06	ISSUED FOR DA ONLY	NH	NH	15.01.2025
05	ISSUED FOR DA ONLY	MP	NH	16.02.2024
04	ISSUED FOR DA ONLY	AFe	NH	05.12.2023
03	ISSUED FOR DA ONLY	MP	NH	13.11.2023
02	PRELIMINARY	NH	NH	16.10.2023
01	ISSUED FOR CO-ORDINATION	NH	NH	12.10.2023

Client: HBB PROPERTY

Architect: nettletontribe

This drawing and design remains the property of Henry & Hymas and may not be copied in whole or in part without the prior written approval of Henry & Hymas.

Suite 2.01
828 Pacific Highway
Gordon NSW 2072
Telephone +61 2 9417 8400
Facsimile +61 2 9417 8337
Email email@hhconsult.com.au
Web www.henryandhymas.com.au

DRAWING TO BE PRINTED IN COLOUR

henry&hymas

Project: PROPOSED COPE WAREHOUSE DEVELOPMENT
LUDDENHAM ROAD, ORCHARD HILLS NSW 2748

Title: DETAIL PLAN
SHEET 2 OF 2

Drawn	Designed	Date
M.Barrozo	N.Heazlewood	OCTOBER 2023
Checked	Approved	Scale @A1
N.Heazlewood	A.Francis	1:500

Drawing number: 231559_DA_C102

Revision: 06

TYPICAL PIT CHAMBER SIZES

IT IS THE CONTRACTORS RESPONSIBILITY TO SELECT PIT CHAMBER SIZE WITH REGARDS TO PIPE SIZE, DEPTH TO INVERT AND SKEW ANGLE. REFER SKETCHES BELOW.

1. SELECT PIT CHAMBER USING THE STEPS BELOW:
2. SELECT PIT CHAMBER SIZE DEPENDING ON THE PIPE DIAMETERS.
3. CHECK PIT CHAMBER SIZE TO SATISFY DEPTH TO INVERT REQUIREMENTS.
   CHECK PIT CHAMBER DIMENSIONS TO SATISFY THE SKEW ANGLE IN THE TABLE.

FOR B = 600mm - MAX. SIDE ENTRY PIPE AT 45° SKEW = 225mm
FOR B = 900mm - MAX. SIDE ENTRY PIPE AT 45° SKEW = 375mm
FOR B = 1200mm - MAX. SIDE ENTRY PIPE AT 45° SKEW = 600mm
FOR B = 1500mm - MAX. SIDE ENTRY PIPE AT 45° SKEW = 825mm
FOR B = 1900mm - MAX. SIDE ENTRY PIPE AT 45° SKEW = 1050mm

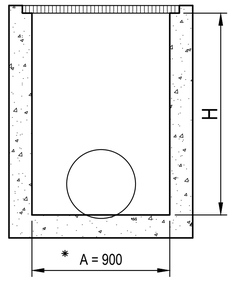

SECTION
NTS

*A = 600 FOR PIPES UP TO 375 DIA.

1 PIT CHAMBER DIMENSIONS FOR PIPES UP TO 600 DIA.

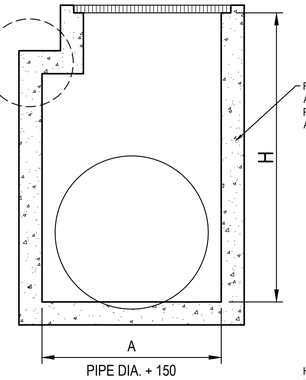

SECTION
NTS

1 PIT CHAMBER FOR PIPES GREATER THAN 600 DIA.

2 PIT SIZE & DEPTH REQUIREMENTS

H = 0-900mm - AxB = 600x600mm
H = 900-1200mm - AxB = 900x600mm
H = >1200mm - AxB = 900x900mm

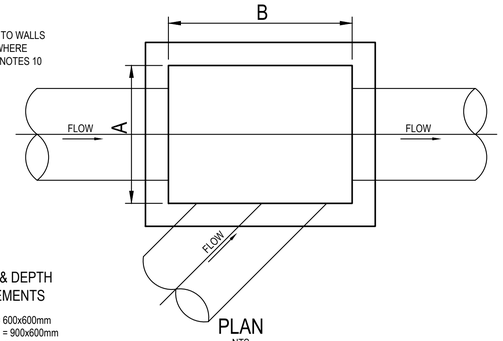

PLAN
NTS

3 PIT CHAMBER FOR SIDE ENTRY ON SKEW

TABLE 1	
SIEVE SIZE (MM)	WEIGHT PASISNG (%)
75.0	100
9.5	100 TO 50
2.36	100 TO 30
0.60	50 TO 15
0.075	25 TO 0

TABLE 2	
SIEVE SIZE (MM)	WEIGHT PASISNG (%)
19.0	100
2.36	100 TO 50
0.60	90 TO 20
0.30	60 TO 10
0.15	25 TO 0
0.075	10 TO 0

TABLE 3				
SUPPORT TYPE	BED ZONE X	HAUNCH ZONE Y	BED AND HAUNCH ZONES COMPACTION	MAX BEDDING FACTOR
HS1	100 IF D<=1500, OR 150 IF D>=1500	0.1D	50	2.0
HS2		0.3D	60	2.5
HS3		0.3D	70	4.0

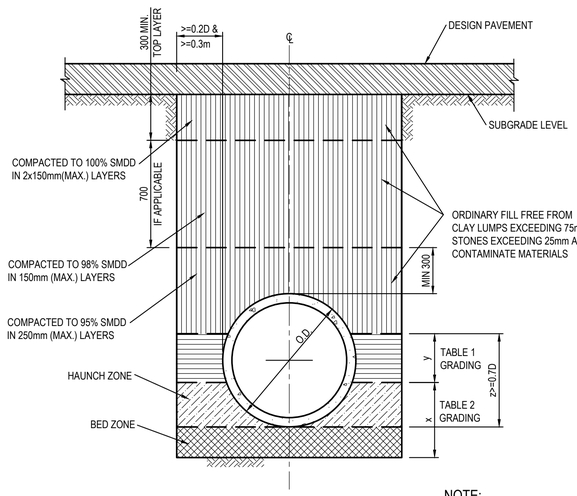

PIPE TRENCH INSTALLATION BENEATH PAVEMENT

(HS SUPPORT TO BE USED UNDER ROADWAY)
SCALE 1:20

NOTE:
TYPE HS2 TO BE USED AS A TYPICAL SUPPORT FOR TRENCHES UNDER ROADWAY UNLESS SPECIFIED SEPERATELY

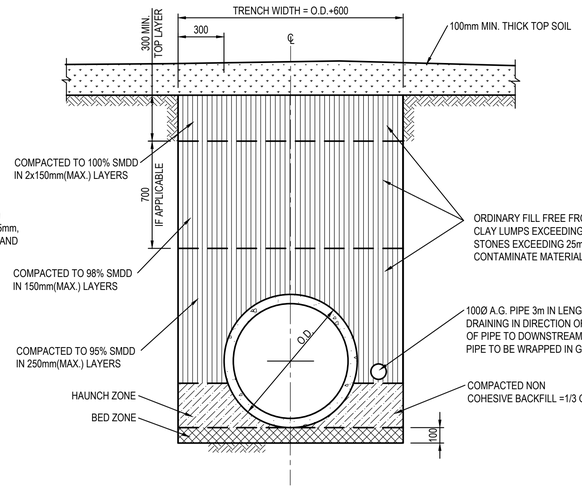

PIPE TRENCH INSTALLATION IN LANDSCAPE AREAS

(H1 & H2 SUPPORT)
SCALE 1:20

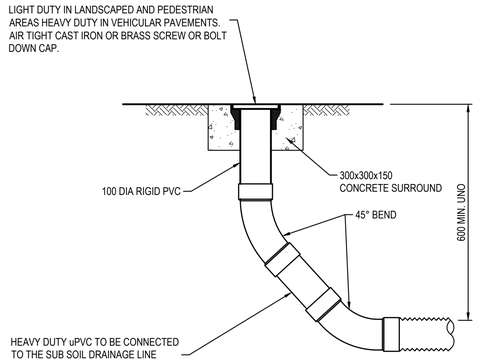

FLUSHING POINT (FP)

SCALE 1:10
NOTE: SLOTTED RIGID PVC PIPE AND FITTINGS MAY BE USED

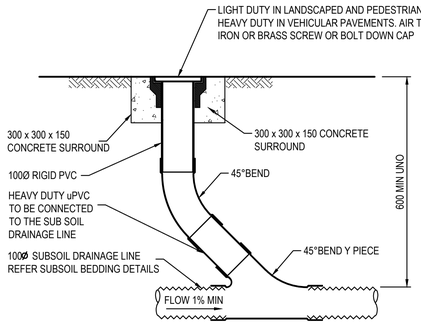

INTERMEDIATE RISER (IR)

SCALE 1:10
NOTE: SLOTTED RIGID PVC PIPE AND FITTINGS MAY BE USED

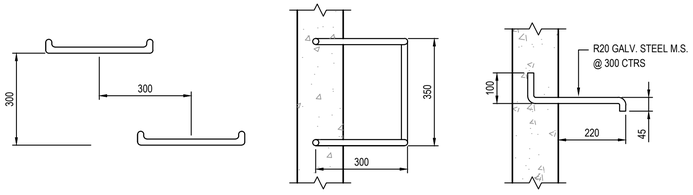

ELEVATION PLAN SECTION

TYPICAL STEP IRON DETAIL

SCALE 1:10

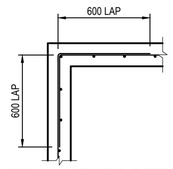

150 WALL - CORNER DETAIL

SCALE 1:20

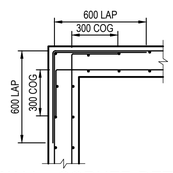

200 WALL - CORNER DETAIL

0 400 800 1200 1600 2000mm
400 200
SCALE 1:20

0 200 400 600 800 1000mm
200 100
SCALE 1:10

PIT LID AND HEADWALL SCHEDULE

PIT/STRUCTURE NUMBER	DESCRIPTION
A-1 A-2 A-3 A-4 A-5 A-6 A-7 A-8 A-9 A-10 A-11 A-12 A-13 A-14 A-15 A-16 A-17 A-18 A-19 A-20 A-21 A-9a B-3 B-6 B-7 B-8 B-9 B-10 B-11 B-11 B-11a B-12 B-12a B-13 B-13 B-13a B-14 B-15 B-15a B-16 B-16a C-1 C-2 C-3 C-4 C-5 C-6 C-7 C-8 C-9 C-10 C-13 B-10a J-1	PROPOSED 900x900 SURFACE INLET PIT WITH HINGED GRATED LID HEAVY DUTY CLASS "D" IN ACCORDANCE WITH PENRITH CITY COUNCIL COUNCIL'S REQUIREMENTS.
GD-1 GD-2 GD-3 GD-4 GD-5 GD-6 GD-8	PROPOSED 250mm WIDE GRATED DRAIN HEAVY DUTY CLASS "D" IN ACCORDANCE WITH PENRITH CITY COUNCIL COUNCIL'S REQUIREMENTS.
C-11 C-12 E-1 E-2 B-2 B-4 B-5	PROPOSED JUNCTION PIT WITH 900x900 HEAVY DUTY SEALED LID CLASS "D" IN ACCORDANCE WITH PENRITH CITY COUNCIL COUNCIL'S REQUIREMENTS.
D-2 D-3 D-4 D-5 D-6 D-7 D-8 D-10	PROPOSED 1200x1200 SURFACE INLET PIT WITH HINGED GRATED LID HEAVY DUTY CLASS "D" IN ACCORDANCE WITH PENRITH CITY COUNCIL COUNCIL'S REQUIREMENTS.
D-1	PROPOSED 1500x1500 SURFACE INLET PIT WITH HINGED GRATED LID HEAVY DUTY CLASS "D" IN ACCORDANCE WITH PENRITH CITY COUNCIL COUNCIL'S REQUIREMENTS.
D-9	PROPOSED 1200x1200 SEALED JUNCTION PIT WITH HEAVY DUTY CLASS "D" LID IN ACCORDANCE WITH PENRITH CITY COUNCIL COUNCIL'S REQUIREMENTS.
K-1 K-2 B-11a B-12a B-13a B-15a B-16a	PROPOSED 600x600 WITH HEAVY DUTY CLASS "D" LID GRATED INLET IN ACCORDANCE WITH PENRITH CITY COUNCIL COUNCIL'S REQUIREMENTS.

NOTE:
ALL STORMWATER INLET PITS TO BE FITTED WITH OCEANGUARD PIT BASKET FOR WATER QUALITY TREATMENT PURPOSES

DRAINAGE NOTES:

1. ALL STORMWATER WORK TO COMPLY WITH AS 3500 PART 3.
2. CONTRACTOR SHALL BE RESPONSIBLE FOR MAINTAINING THE MINIMUM COVER OF 600mm ON ALL PIPES.
3. PROTECTION OF PIPES DUE TO LOADS EXCEEDING W7 WHEEL LOAD SHALL BE THE CONTRACTOR'S RESPONSIBILITY.
4. BEDDING TYPE SHALL BE TYPE H2 FOR RCP. WHERE NECESSARY THE OVERLAY ZONE SHALL BE REDUCED TO ACCOMMODATE PAVEMENT REQUIREMENTS. REFER TO THIS DRAWING FOR DETAILS.
5. MINIMUM COVER OVER EXISTING PIPES FOR PROTECTION DURING CONSTRUCTION SHALL BE 800mm.
6. NO CONSTRUCTION LOADS SHALL BE APPLIED TO PLASTIC PIPES.
7. FINISHED SURFACE LEVELS SHOWN ON LAYOUT PLAN DRGS TAKE PRECEDENCE OVER DESIGN DRAINAGE SURFACE LEVELS.
8. ALL PIPES UP TO AND INCLUDING 300 DIA. SHALL BE SOLVENT OR RUBBER RING JOINTED PVC CLASS SH PIPE TO AS1260. ALL OTHER PIPES TO BE RCP USING CLASS 2 RUBBER RING JOINTED PIPE. HARDIES FRC PIPE MAY BE USED IN LIEU OF RCP IF DESIRED IN GROUND. ALL AERIAL PIPES TO BE PVC CLASS SH.
9. ALL PITS IN NON TRAFFICABLE AREAS TO BE PREFABRICATED POLYESTER CONCRETE "POLYCRETE" WITH "LIGHT DUTY" CLASS B GALV. MILD STEEL GRATING AND FRAME.
   ALL PITS IN TRAFFICABLE AREAS (CLASS "D" LOADING MAX) TO HAVE 150mm THICK CONCRETE WALLS AND BASE CAST IN-SITU f'c=32 MPa, REINFORCED WITH N12-200 BOTH LOADING WAYS CENTRALLY PLACE .U.N.O. ON SEPARATE DESIGN DRAWINGS IN THIS SET. GALV.MILD STEEL GRATING AND FRAME TO SUIT DESIGN LOADING. PRECAST PITS, RECTANGULAR OR CIRCULAR IN SHAPE, MAY BE USED IN LIEU AND SHALL COMPLY WITH RELEVANT AUSTRALIAN STANDARDS.
10. ALL PITS, GRATINGS AND FRAMES SHALL BE INSTALLED IN ACCORDANCE WITH THE MANUFACTURERS SPECIFICATION AND TO BE IN ACCORDANCE WITH AS3500.3 AND AS3996.
11. PIT CHAMBER DIMENSIONS ARE TO BE SELECTED TO SATISFY THE FOLLOWING:
    - PIPE SIZE
    - DEPTH TO INVERT
    - SKEW ANGLE
    REFER TYPICAL PIT CHAMBER DETAILS BELOW
    IF PIT LID SIZE IS SMALLER THAN THE PIT CHAMBER SIZE THEN THE PIT LID IS TO BE CONSTRUCTED ON THE CORNER OF THE PIT CHAMBER WITH THE STEP IRONS DIRECTLY BELOW. ALTERNATIVELY THE PIT LID TO BE USED, IS TO BE THE SAME SIZE AS THE PIT CHAMBER.
12. FOR PIPE SIZES GREATER THAN Ø300mm, PIT FLOOR IS TO BE BENCHED TO FACILITATE FLOW.
13. GALVANISED STEP IRONS SHALL BE PROVIDED AT 300 CTS FOR PITS HAVING A DEPTH EXCEEDING 1200mm. SUBSOIL DRAINAGE PIPE SHALL BE PROVIDED IN PIPE TRENCHES ADJACENT TO INLET PIPES. (MINIMUM LENGTH 3m).
14. ALL SUBSOIL PIPES SHALL BE 100mm SLOTTED PVC IN A FILTER SOCK, UNO, WITH 3m INSTALLED UPSTREAM OF ALL PITS.
15. ALL PIPEWORK SHALL HAVE MINIMUM DIAMETER 100.
16. MINIMUM GRADE FOR ROOFWATER DRAINAGE LINES SHALL BE 1%.
17. ALL PIPE JUNCTIONS AND TAPER UP TO AND INCLUDING 300 DIA. SHALL BE VIA PURPOSE MADE FITTINGS.
18. ALL ROOF DRAINAGE TO BE INSTALLED IN ACCORDANCE WITH AS3500, PART 3. TESTING TO BE UNDERTAKEN AND REPORTS PROVIDED TO THE SUPERINTENDENT.
19. LOCATION OF THE DIRECT DOWN PIPE CONNECTIONS MAY VARY ON SITE TO SUIT SITE CONDITIONS, WHERE CONNECTION SHOWN ON LONG SECTIONS CHAINAGES ARE INDICATIVE ONLY.
20. PITS IN EXCESS OF 1.5 m DEEP TO HAVE WALL AND FLOOR THICKNESS INCREASED TO 200mm. REINFORCED WITH N12@200 CTS CENTRALLY PLACED BOTH WAYS THROUGHOUT U.N.O.ON SEPARATE DESIGN DRAWINGS IN THIS SET. IF DEPTH EXCEEDS 5m CONTACT ENGINEER.
21. SUBSOIL DRAINAGE LINES FOR LANDSCAPE AREA NOT SHOWN ON THESE DRAWINGS. REFER TO LANDSCAPING PLANS FOR DETAILS.
22. ALL STORMWATER PITS TO HAVE Ø100 uPVC SLOTTED SUBSOIL PIPES CONNECTED TO THEM. THESE SUBSOILS TO EXTEND 3m UPSTREAM OF THE PIT AT A MINIMUM GRADE.

FOR DA ONLY

SURVEY INFORMATION
SURVEYED BY WATSDON BUCHAN
DATUM: A.H.D.
ORIGIN OF LEVELS: SSM 22740 RL41.10

REVISION	AMENDMENT	DRAWN	DESIGNED	DATE	REVISION	AMENDMENT	DRAWN	DESIGNED	DATE
04	ISSUED FOR DA ONLY	NH	NH	15.01.2025					
03	ISSUED FOR DA ONLY	MP	NH	16.02.2024					
02	ISSUED FOR DA ONLY	MP	NH	13.11.2023					
01	PRELIMINARY	MB	NH	16.10.2023					

Client
HBB PROPERTY
Architect
nettletontribe

This drawing and design remains the property of Henry & Hymas and may not be copied in whole or in part without the prior written approval of Henry & Hymas.

Suite 2.01
828 Pacific Highway
Gordon NSW 2072
Telephone +61 2 9417 8400
Facsimile +61 2 9417 8337
Email email@hhconsult.com.au
Web www.henryandhymas.com.au

DRAWING TO BE PRINTED IN COLOUR

henry&hymas

Project
PROPOSED COPE WAREHOUSE DEVELOPMENT
LUDDENHAM ROAD, ORCHARD HILLS NSW 2748

Title
STORMWATER MISCELLANEOUS DETAILS AND PIT LID SCHEDULE

Drawn	Designed	Original issue date
M.Barrozo	N.Heazlewood	OCTOBER 2023
Checked	Approved	Scale @A1
N.Heazlewood	A.Francis	AS NOTED

Drawing number 231559_DA_C200
Revision 04

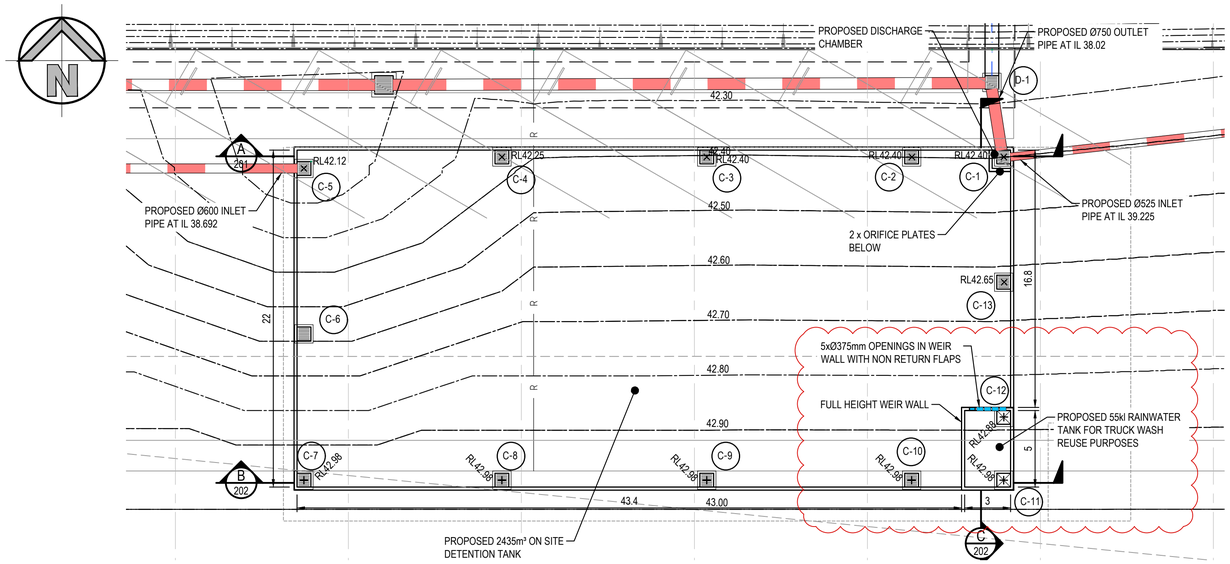

OSD TANK PLAN

SCALE: 1:200

DANGER

CONFINED SPACE

NO ENTRY WITHOUT CONFINED SPACE TRAINING

A) A CONFINED SPACE DANGER SIGN SHALL BE POSITIONED IN A LOCATION SUCH THAT IT IS CLEARLY VISIBLE TO PERSONS PROPOSING TO ENTER THE BELOW GROUND TANKS/ CONFINED SPACE AT ALL ACCESS POINTS OF THE TANK/ CONFINED SPACE.

B) SIGN TO BE MINIMUM DIMENSIONS: 250mm x 180mm ENTRIES I.E.. GRATES, MANHOLES

C) SIGN SHALL BE MANUFACTURED FROM COLOUR BONDED METAL OR POLYPROPYLENE

D) SIGN SHALL BE AFFIXED TO A SURFACE WITH SCREWS AT EACH CORNER.

100 x 16 MOUNTING BAR WITH BRACKETS, SCREEN TO BE ATTACHED (GENERALLY ON A SLIDING MECHANISM) TO THE WALL, BUT SHOULD BE REMOVABLE (WITHOUT THE USE OF TOOLS) TO PERMIT CLEANSING AND EASY INSPECTION OF THE OUTLET CONTROL. ALL STEEL TO BE HOT DIPPED GALVANISED.

SCREEN TYPE WELDLOK A40/203 IS RECOMENDED FOR ORIFICES LARGER THAN 150mm AND SCREEN AREA 20 x THE ORIFICE AREA FOR THAT TYPE OF SCREEN - REFER UPRCT SECTION 4-13

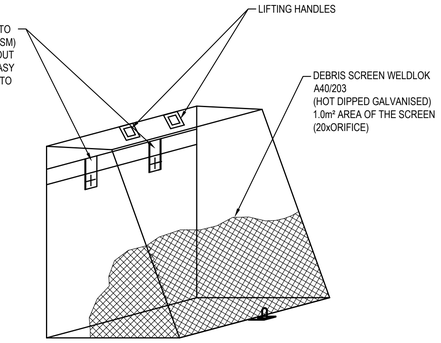

DEBRIS SCREEN DETAIL

NOT TO SCALE

ALL STEEL TO BE HOT DIPPED GALVANISED

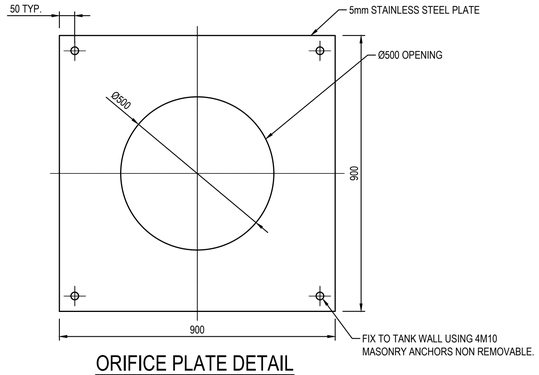

ORIFICE PLATE DETAIL

SCALE 1:10

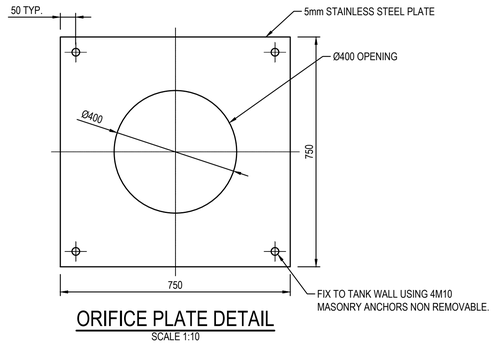

ORIFICE PLATE DETAIL

SCALE 1:10

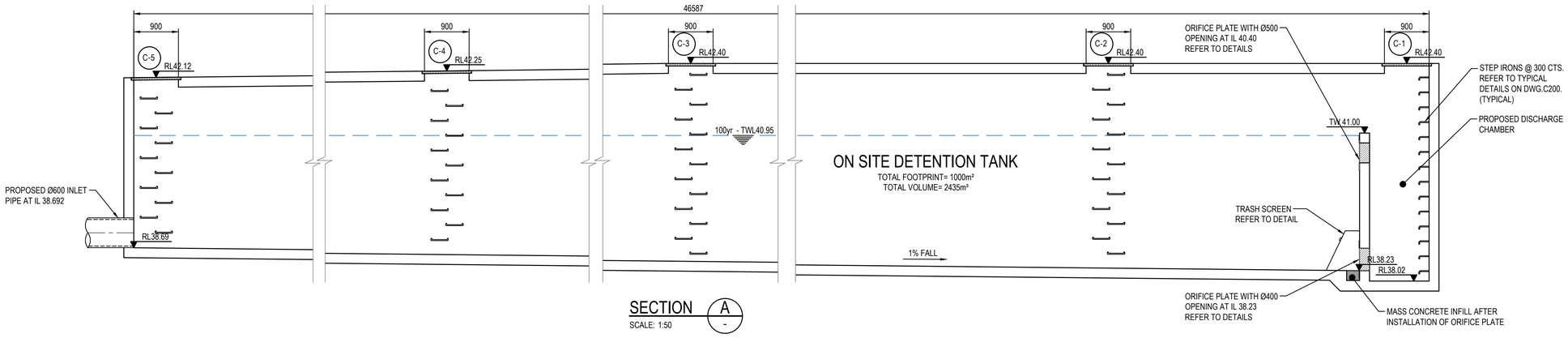

SECTION A

SCALE: 1:50

0 200 400 600 800 1000mm
200 100
SCALE 1:10

0 1000 2000 3000 4000 5000mm
1000 600 200
SCALE 1:50

0 4 8 12 16 20m
4 3 2 1
SCALE 1:200

FOR DA ONLY

SURVEY INFORMATION
SURVEYED BY WATSDON BUCHAN
DATUM: A.H.D.
ORIGIN OF LEVELS: SSM 22740 RL41.10

REVISION	AMENDMENT	DRAWN	DESIGNED	DATE	REVISION	AMENDMENT	DRAWN	DESIGNED	DATE
03	ISSUED FOR DA ONLY	MB	NH	11.09.2024					
02	ISSUED FOR DA ONLY	MP	NH	16.02.2024					
01	ISSUED FOR DA ONLY	MP	NH	13.11.2023					

Client
HBB PROPERTY

Architect
nettletontribe

This drawing and design remains the property of Henry & Hymas and may not be copied in whole or in part without the prior written approval of Henry & Hymas.

Suite 2.01
828 Pacific Highway
Gordon NSW 2072

Telephone +61 2 9417 8400
Facsimile +61 2 9417 8337
Email email@hhconsult.com.au
Web www.henryandhymas.com.au

DRAWING TO BE PRINTED IN COLOUR

henry&hymas

Project
PROPOSED COPE WAREHOUSE DEVELOPMENT
LUDDENHAM ROAD, ORCHARD HILLS NSW 2748

Title
OSD TANK PLAN AND DETAILS
SHEET 1 OF 2

Drawn	Designed	Original issue date
M.Barrozo	N.Heazlewood	OCTOBER 2023
Checked	Approved	Scale @A1
N.Heazlewood	A.Francis	AS NOTED

Drawing number 231559_DA_C201

Revision 03

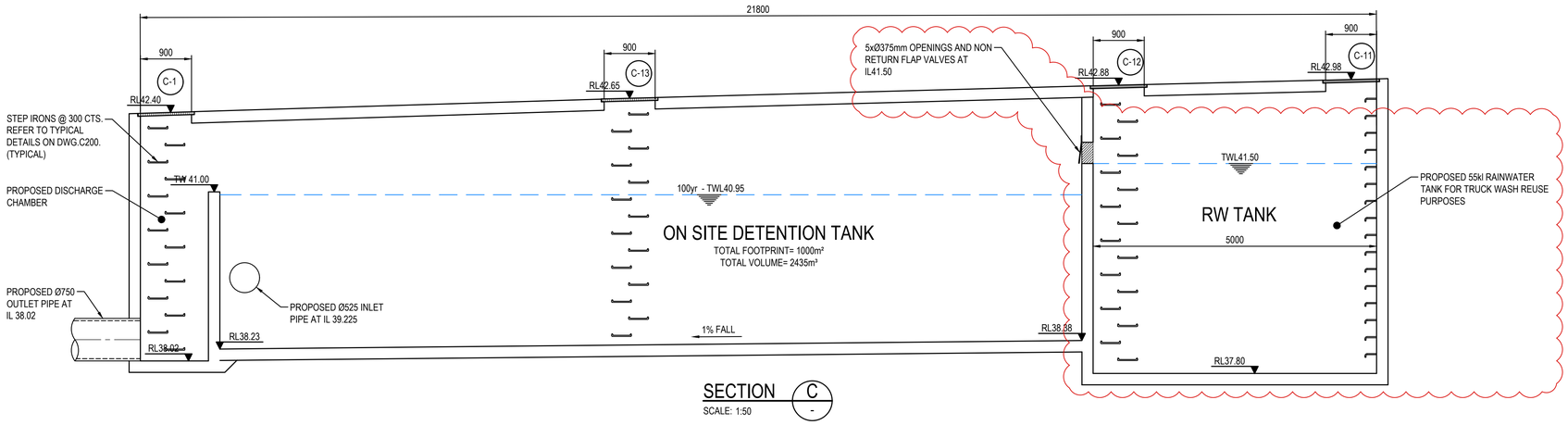

SECTION C
SCALE: 1:50

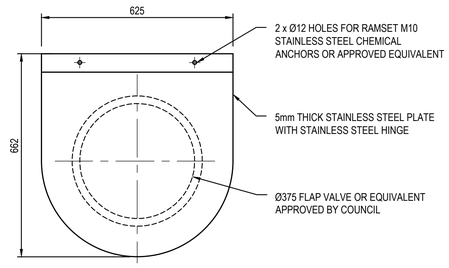

FLAP VALVE DETAIL
SCALE 1:10

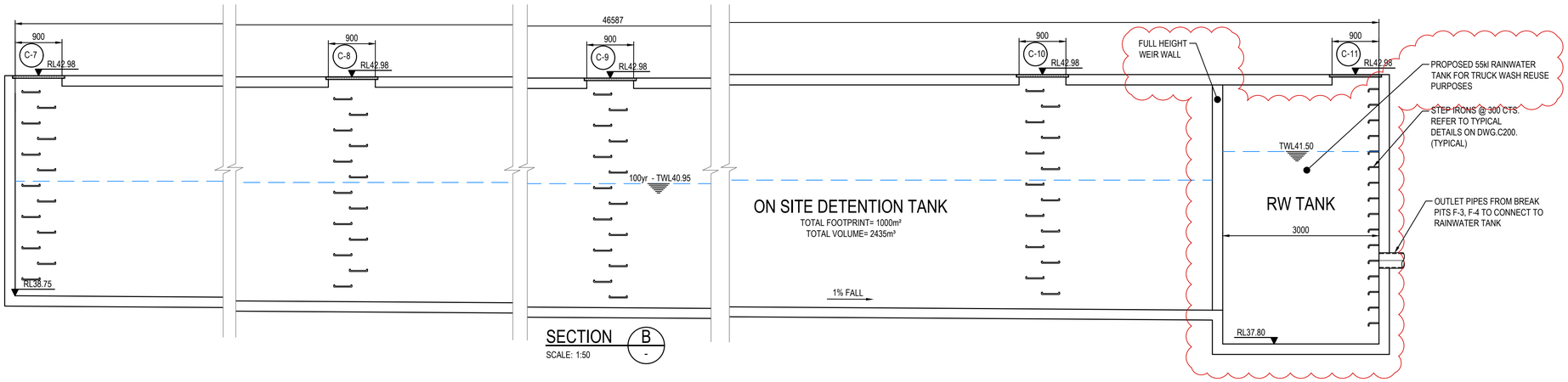

SECTION B
SCALE: 1:50

0 1000 2000 3000 4000 5000mm
1000 600 200
SCALE 1:50

FOR DA ONLY

SURVEY INFORMATION
SURVEYED BY
WATSDON BUCHAN
DATUM: A.H.D.
ORIGIN OF LEVELS: SSM 22740 RL41.10

REVISION	AMENDMENT	DRAWN	DESIGNED	DATE
03	ISSUED FOR DA ONLY	MB	NH	11.09.2024
02	ISSUED FOR DA ONLY	MP	NH	16.02.2024
01	ISSUED FOR DA ONLY	MP	NH	13.11.2023

Client
HBB PROPERTY

Architect
nettletontribe

This drawing and design remains the property of Henry & Hymas and may not be copied in whole or in part without the prior written approval of Henry & Hymas.

Suite 2.01
828 Pacific Highway
Gordon NSW 2072
Telephone +61 2 9417 8400
Facsimile +61 2 9417 8337
Email email@hhconsult.com.au
Web www.henryandhymas.com.au

DRAWING TO BE PRINTED IN COLOUR

henry&hymas

Project
PROPOSED COPE WAREHOUSE DEVELOPMENT
LUDDENHAM ROAD, ORCHARD HILLS NSW 2748

Title
OSD TANK PLAN AND DETAILS
SHEET 2 OF 2

Drawn	Designed	Original issue date
M.Barrozo	N.Heazlewood	OCTOBER 2023
Checked	Approved	Scale @A1
N.Heazlewood	A.Francis	1:50

Drawing number 231559_DA_C202
Revision 03

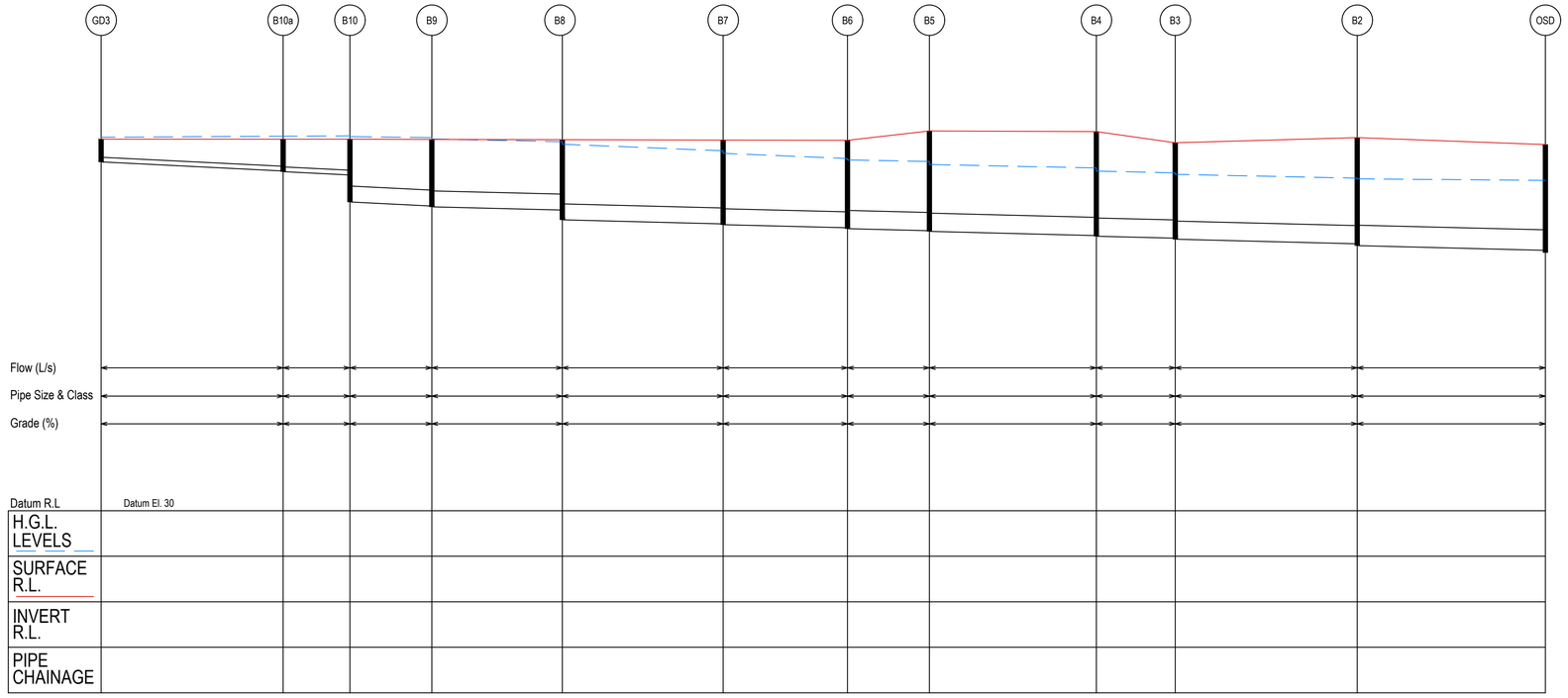

LINE B

HORIZONTAL SCALE 1:500 @ A1
VERTICAL SCALE 1:100 @ A1

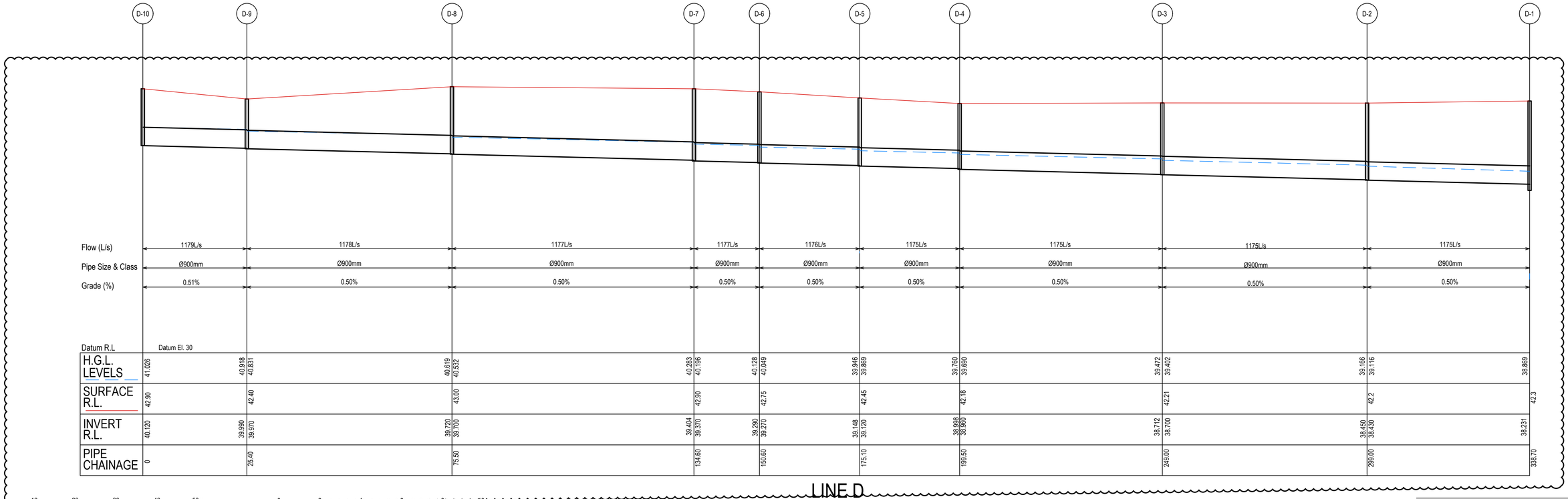

LINE D

HORIZONTAL SCALE 1:500 @ A1
VERTICAL SCALE 1:100 @ A1

0 10 20 30 40 50m
10 8 6 4 2
SCALE 1:500

0 2 4 6 8 10m
2 1
SCALE 1:100

FOR DA ONLY

SURVEY INFORMATION
SURVEYED BY
WATSDON BUCHAN
DATUM: A.H.D.
ORIGIN OF LEVELS: SSM 22740 RL41.10

REVISION	AMENDMENT	DRAWN	DESIGNED	DATE
03	ISSUED FOR DA ONLY	NH	NH	15.01.2025
02	ISSUED FOR DA ONLY	MP	NH	16.02.2024
01	ISSUED FOR DA ONLY	MP	NH	13.11.2023

Client
HBB PROPERTY

Architect
nettletontribe

This drawing and design remains the property of Henry & Hymas and may not be copied in whole or in part without the prior written approval of Henry & Hymas.

Suite 2.01
828 Pacific Highway
Gordon NSW 2072
Telephone +61 2 9417 8400
Facsimile +61 2 9417 8337
Email email@hhconsult.com.au
Web www.henryandhymas.com.au

DRAWING TO BE PRINTED IN COLOUR

henry&hymas

Project
PROPOSED COPE WAREHOUSE DEVELOPMENT
LUDDENHAM ROAD, ORCHARD HILLS NSW 2748

Title
STORMWATER LONGITUDINAL SECTIONS
SHEET 1 OF 2

Drawn	Designed	Original issue date
M.Barrozo	N.Heazlewood	OCTOBER 2023
Checked	Approved	Scale @A1
N.Heazlewood	A.Francis	AS NOTED

Drawing number 231559_DA_C210
Revision 03

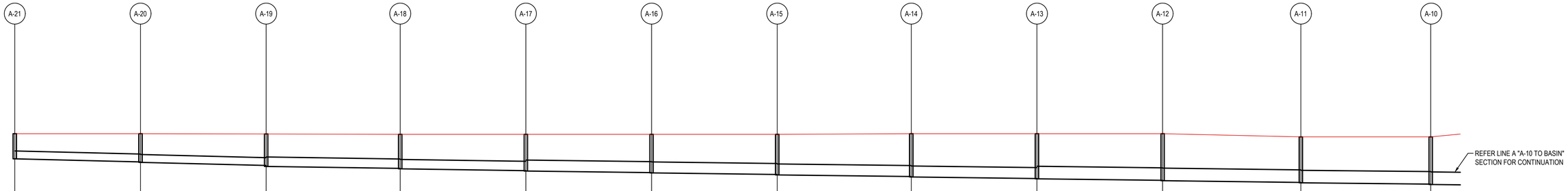

Pipe Size & Class	Ø375mm	Ø375mm	Ø450mm	Ø450mm	Ø525mm	Ø525mm	Ø525mm	Ø525mm	Ø600mm	Ø600mm	Ø600mm	
Grade (%)	0.50%	0.50%	0.30%	0.30%	0.25%	0.25%	0.25%	0.25%	0.25%	0.25%	0.20%	
Datum R.L	Datum El. 30											
SURFACE R.L.	41.90	41.90	41.89	41.87	41.87	41.87	41.87	41.90	41.90	41.90	41.75	41.75
INVERT R.L.	40.700	40.550 40.530	40.380 40.336	40.240 40.220	40.130 40.115	40.040 40.025	39.950 39.930	39.850 39.830	39.755 39.743	39.668 39.653	39.570 39.550	39.488 39.470
PIPE CHAINAGE	0	30.00	60.00	92.00	122.00	152.00	182.00	214.00	244.00	274.00	307.00	338.00

LINE A - "A-21 TO A-10"

HORIZONTAL SCALE 1:500 @ A1
VERTICAL SCALE 1:100 @ A1

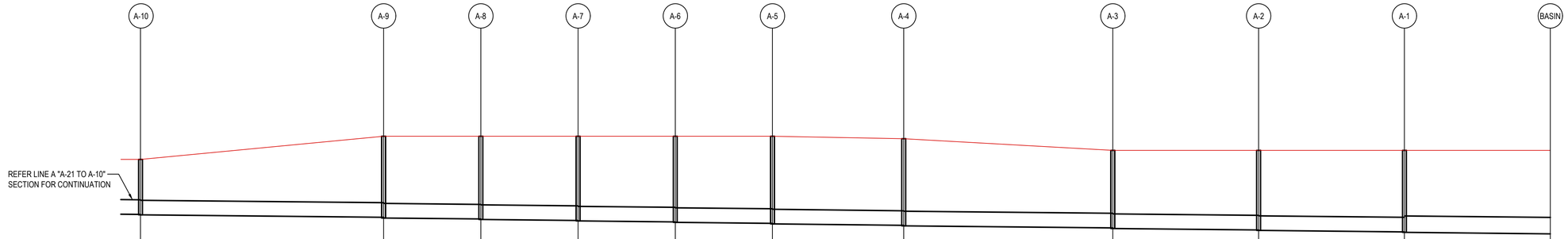

Ø600mm	Ø600mm	Ø600mm	Ø600mm	Ø600mm	Ø600mm	Ø600mm	Ø600mm	Ø600mm	Ø675mm		
0.20%	0.20%	0.20%	0.20%	0.20%	0.23%	0.20%	0.20%	0.20%	0.20%		
41.75	42.70	42.70	42.70	42.70	42.70	42.60	42.12	42.12	42.12	42.120	
39.488 39.470	39.370 39.340	39.300 39.280	39.240 39.220	39.180 39.160	39.120 39.100	39.038 39.020	38.934 38.910	38.850 38.830	38.770 38.750	38.690	
338.00	388.00	408.00	428.00	448.00	468.00	495.00	538.00	568.00	598.00	628.00	

LINE A - "A-10 TO BASIN"

HORIZONTAL SCALE 1:500 @ A1
VERTICAL SCALE 1:100 @ A1

0 10 20 30 40 50m
10 8 6 4 2
SCALE 1:500

0 2 4 6 8 10m
2 1
SCALE 1:100

FOR DA ONLY

SURVEY INFORMATION
SURVEYED BY
WATSDON BUCHAN
DATUM: A.H.D.
ORIGIN OF LEVELS: SSM 22740 RL41.10

REVISION	AMENDMENT	DRAWN	DESIGNED	DATE	REVISION	AMENDMENT	DRAWN	DESIGNED	DATE
03	ISSUED FOR DA ONLY	NH	NH	15.01.2025					
02	ISSUED FOR DA ONLY	MP	NH	16.02.2024					
01	ISSUED FOR DA ONLY	MP	NH	13.11.2023					

Client
HBB PROPERTY

Architect
nettletontribe

This drawing and design remains the property of Henry & Hymas and may not be copied in whole or in part without the prior written approval of Henry & Hymas.

Suite 2.01
828 Pacific Highway
Gordon NSW 2072
Telephone +61 2 9417 8400
Facsimile +61 2 9417 8337
Email email@hhconsult.com.au
Web www.henryandhymas.com.au

DRAWING TO BE PRINTED IN COLOUR

henry&hymas

Project
PROPOSED COPE WAREHOUSE DEVELOPMENT
LUDDENHAM ROAD, ORCHARD HILLS NSW 2748

Title
STORMWATER LONGITUDINAL SECTIONS
SHEET 2 OF 2

Drawn	Designed	Original issue date
M.Barrozo	N.Heazlewood	OCTOBER 2023
Checked	Approved	Scale @A1
N.Heazlewood	A.Francis	AS NOTED

Drawing number 231559_DA_C211
Revision 03

TOTAL SITE =80170m²

ROOF AREA TO RW TANK
AREA = 25880m² (100% IMPERVIOUS)

ROOF AREA TO BYPASS RAINWATER TANK
AREA = 20716m² (100% IMPERVIOUS)

EXTERNAL AREA TO OSD TANK
AREA = 27267m² (78% IMPERVIOUS)

BYPASS TO COLLECTOR ROAD
AREA = 235m² (100% IMPERVIOUS)

CARPARKING TO OSD TANK
AREA = 6072m² (94% IMPERVIOUS)

NOTE:
MINIMUM OF 70% OF MAIN WAREHOUSE ROOF AREA TO BE CONNECTED TO RAINWATER TANKS. OFFICE ROOF AREA TO BYPASS RAINWATER TANK. AWNINGS TO BYPASS RAINWATER TANK

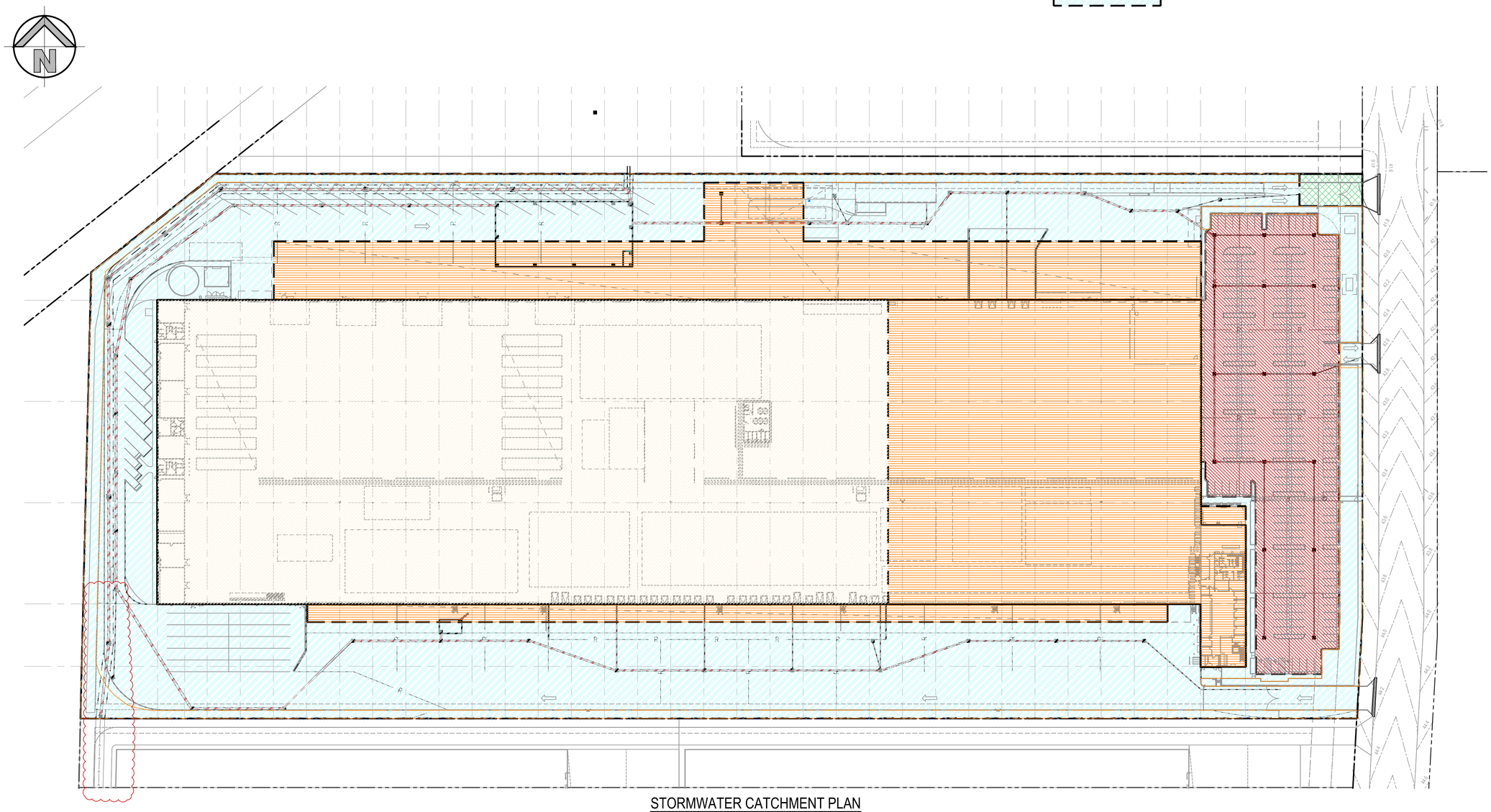

STORMWATER CATCHMENT PLAN
SCALE: 1:750

0 15 30 45 60 75m
15 10 5
SCALE 1:750

FOR DA ONLY

SURVEY INFORMATION
SURVEYED BY WATSDON BUCHAN
DATUM: A.H.D.
ORIGIN OF LEVELS: SSM 22740 RL41.10

REVISION	AMENDMENT	DRAWN	DESIGNED	DATE	REVISION	AMENDMENT	DRAWN	DESIGNED	DATE
07	ISSUED FOR DA ONLY	NH	NH	24.10.2024					
06	ISSUED FOR DA ONLY	MB	NH	11.09.2024					
05	ISSUED FOR DA ONLY	MP	NH	19.02.2024					
04	ISSUED FOR DA ONLY	MP	NH	16.02.2024					
03	ISSUED FOR DA ONLY	AFe	NH	05.12.2023					
02	ISSUED FOR DA ONLY	MP	NH	13.11.2023	09	ISSUED FOR DA ONLY	NH	NH	15.01.2025
01	PRELIMINARY	NH	NH	16.10.2023	08	ISSUED FOR DA ONLY	NH	NH	07.11.2024

Client
HBB PROPERTY

Architect
nettletontribe

This drawing and design remains the property of Henry & Hymas and may not be copied in whole or in part without the prior written approval of Henry & Hymas.

Suite 2.01
828 Pacific Highway
Gordon NSW 2072

Telephone +61 2 9417 8400
Facsimile +61 2 9417 8337
Email email@hhconsult.com.au
Web www.henryandhymas.com.au

Global Mark.com.au®

DRAWING TO BE PRINTED IN COLOUR

henry&hymas

Project
PROPOSED COPE WAREHOUSE DEVELOPMENT
LUDDENHAM ROAD, ORCHARD HILLS NSW 2748

Title
STORMWATER CATCHMENT PLAN

Drawn	Designed	Date
M.Barrozo	N.Heazlewood	OCTOBER 2023
Checked	Approved	Scale @A1
N.Heazlewood	A.Francis	1:750

Drawing number: 231559_DA_C250
Revision: 09

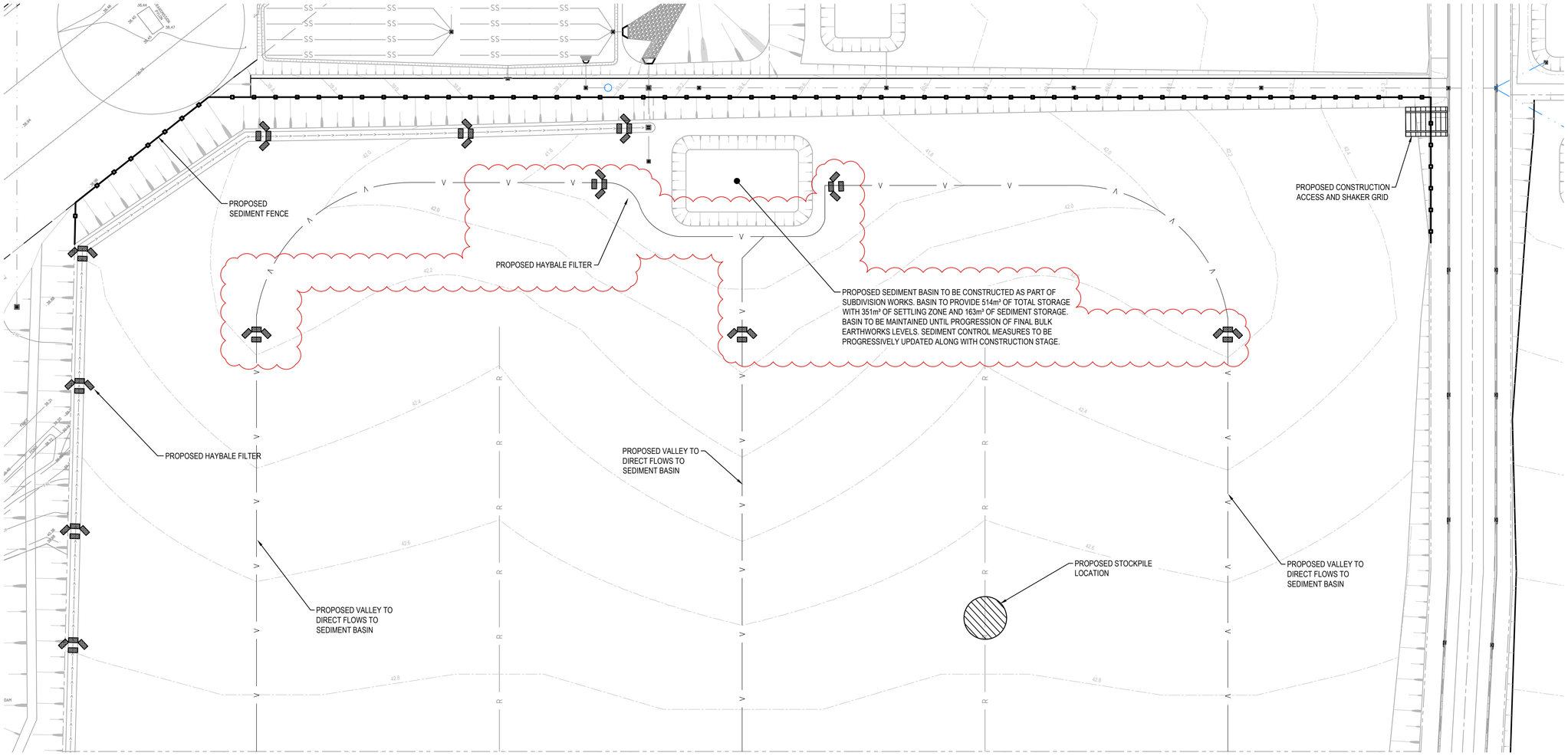

SEDIMENT AND EROSION CONTROL PLAN

SCALE: 1:750

LEGEND

- SITE BOUNDARY
- PROPOSED SEDIMENTATION FENCE
- TM — PROPOSED TRAFFIC MANOEUVRING
- CD — PROPOSED CATCH DIVERSION DRAIN
- PROPOSED STOCKPILE LOCATION
- PROPOSED VEHICLE SHAKER GRID
- PROPOSED STABILISED SITE ACCESS
- PROPOSED SEDIMENT BASIN

SEDIMENT & EROSION CONTROL NOTES

- ALL SEDIMENT CONTROL DEVICES ARE TO BE CONSTRUCTED, PLACED AND MAINTAINED IN ACCORDANCE WITH PENRITH CITY COUNCIL'S "SPECIFICATIONS, LANDCOM'S "SOIL AND CONSTRUCTION" MANUAL AND IECA (2008) APPENDIX B (JUNE2018).
- ALL PERIMETER & SILTATION CONTROL MEASURES ARE TO BE PLACED PRIOR TO, OR AS THE FIRST STEP IN EARTH WORKS AND/OR CLEARING.
- THE SEDIMENT & EROSION CONTROL PLAN MAY REQUIRE FUTURE ADJUSTMENT TO REFLECT CONSTRUCTION STAGING. IT IS ALSO THE CONTRACTORS RESPONSIBILTY TO PREPARE THEIR OWN SEDIMENT AND EROSION CONTROL PLAN WHICH SUITS THE DESIGNED CONSTRUCTION STAGING.
- FILTRATION BUFFER ZONES ARE TO BE FENCED OFF AND ACCESS PROHIBITED TO ALL PLANT AND MACHINERY.
- ALL TEMPORARY EARTH BERMS, DIVERSIONS & SILT DAM EMBANKMENTS ARE TO BE MACHINE COMPACTED, SEEDED & MULCHED FOR TEMPORARY VEGETATION COVER AS SOON AS THEY HAVE BEEN FORMED.
- ALL SEDIMENT TRAPPING STRUCTURES AND DEVICES ARE TO BE INSPECTED AFTER STORMS FOR STRUCTURAL DAMAGE OR CLOGGING. TRAPPED MATERIAL IS TO BE REMOVED TO A SAFE LOCATION.
- ALL TOPSOIL IS TO BE STOCKPILED ON SITE FOR REUSE (AWAY FROM TREES AND DRAINAGE LINES). MEASURES SHALL BE APPLIED TO PREVENT EROSION OF THE STOCKPILES.
- ALL EARTHWORK AREAS SHALL BE ROLLED EACH EVENING TO SEAL THE EARTHWORKS.
- ALL FILLS ARE TO BE LEFT WITH A LIP AT THE TOP OF THE SLOPE AT THE END. ALL CUT AND FILL SLOPES ARE TO BE SEEDED AND STRAW MULCHED WITHIN 14 DAYS OF COMPLETION OF FORMATION U.N.O. BY LANDSCAPE ARCHITECTS.
- UPON COMPLETION OF ALL EARTHWORKS OR AS DIRECTED BY COUNCIL SOIL CONSERVATION TREATMENTS SHALL BE APPLIED SO AS TO RENDER AREAS THAT HAVE BEEN DISTURBED, EROSION PROOF WITHIN 14 DAYS.
- EROSION AND SILT PROTECTION MEASURES ARE TO BE MAINTAINED AT ALL TIMES.

SEDIMENT BASIN DETAILS

BASIN TYPE:	TYPE B
TOTAL BASIN VOLUME:	514m³
TOTAL SETTLING VOLUME:	351m³
SETTLING ZONE SURFACE AREA:	702m²
SETTLING ZONE DEPTH:	0.5m
SEDIMENT STORAGE ZONE DEPTH:	0.3m
50% OF Q_{1YR}:	0.059m³/s
LOT AREA:	80244m²
BASIN (WIDTH/LENGTH):	1/3
FLOCCULATION SYSTEM:	AUTOMATIC
ACCEPTABLE PH RANGE OF STORMWTATER DISCHARGED:	6.5 - 8.5
MAX TSS (mg/L) OF STORMWAYER:	50mg/L

0 15 30 45 60 75m

15 10 5

SCALE 1:750

FOR DA ONLY

SURVEY INFORMATION
SURVEYED BY
WATSDON BUCHAN
DATUM: A.H.D.
ORIGIN OF LEVELS: SSM 22740 RL41.10

REVISION	AMENDMENT	DRAWN	DESIGNED	DATE	REVISION	AMENDMENT	DRAWN	DESIGNED	DATE
04	ISSUED FOR DA ONLY	MB	NH	11.09.2024					
03	ISSUED FOR DA ONLY	MP	NH	16.02.2024					
02	ISSUED FOR DA ONLY	MP	NH	13.11.2023					
01	PRELIMINARY	NH	NH	16.10.2023					

Client
HBB PROPERTY

Architect
nettletontribe

This drawing and design remains the property of Henry & Hymas and may not be copied in whole or in part without the prior written approval of Henry & Hymas.

Suite 2.01
828 Pacific Highway
Gordon NSW 2072

Telephone +61 2 9417 8400
Facsimile +61 2 9417 8337
Email email@hhconsult.com.au
Web www.henryandhymas.com.au

DRAWING TO BE PRINTED IN COLOUR

henry&hymas

Project
PROPOSED COPE WAREHOUSE DEVELOPMENT
LUDDENHAM ROAD, ORCHARD HILLS NSW 2748

Title
SEDIMENT AND EROSION CONTROL PLAN

Drawn	Designed	Date
M.Barrozo	N.Heazlewood	OCTOBER 2023
Checked	**Approved**	**Scale @A1**
N.Heazlewood	A.Francis	1:750

Drawing number: 231559_DA_SE01

Revision: 04

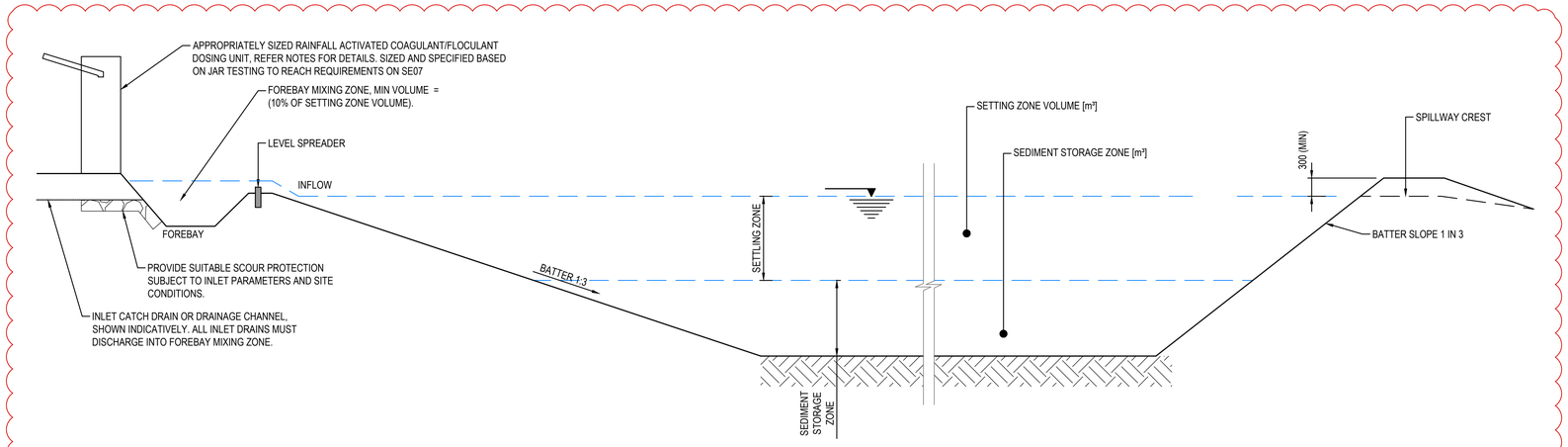

INDICATIVE SEDIMENT BASIN - TYPE B

N.T.S.

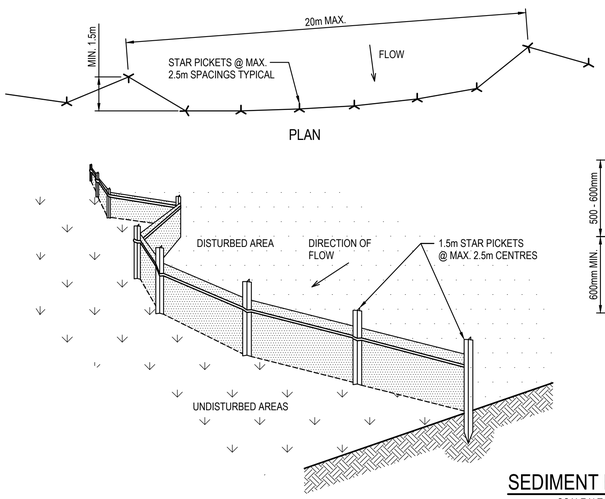

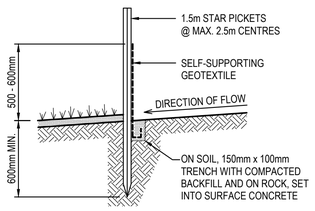

SECTION DETAIL

SEDIMENT FENCE

SCALE N.T.S.

SEDIMENT FENCE CONSTRUCTION NOTES:

1. CONSTRUCT SEDIMENT FENCES AS CLOSE AS POSSIBLE TO BEING PARALLEL TO THE CONTOURS OF THE SITE, BUT WITH SMALL RETURNS AS SHOWN IN THE DRAWING TO LIMIT THE CATCHMENT AREA OF ANY ONE SECTION. THE CATCHMENT AREA SHOULD BE SMALL ENOUGH TO LIMIT WATER FLOW IF CONCENTRATED AT ONE POINT TO 50 LITRES PER SECOND IN THE DESIGN STORM EVENT, USUALLY THE 10-YEAR EVENT.
2. CUT A 150mm DEEP TRENCH ALONG THE UPSLOPE LINE OF THE FENCE FOR THE BOTTOM OF THE FABRIC TO BE ENTRENCHED.
3. DRIVE 1.5m LONG STAR PICKETS INTO GROUND @ 2.5m INTERVALS (MAX.) AT THE DOWNSLOPE EDGE OF THE TRENCH. ENSURE ANY STAR PICKETS ARE FITTED WITH SAFETY CAPS.
4. FIX SELF-SUPPORTING GEOTEXTILE TO THE UPSLOPE SIDE OF THE POSTS ENSURING IT GOES TO THE BASE OF THE TRENCH. FIX THE GEOTEXTILE WITH WIRE TIES OR AS RECOMMENDED BY THE MANUFACTURER. ONLY USE GEOTEXTILE SPECIFICALLY PRODUCED FOR SEDIMENT FENCING. THE USE OF SHADE CLOTH FOR THIS PURPOSE IS NOT SATISFACTORY.
5. JOIN SECTIONS OF FABRIC AT A SUPPORT POST WITH A 150mm OVERLAP.
6. BACKFILL THE TRENCH OVER THE BASE OF THE FABRIC AND COMPACT IT THOROUGHLY OVER THE GEOTEXTILE.

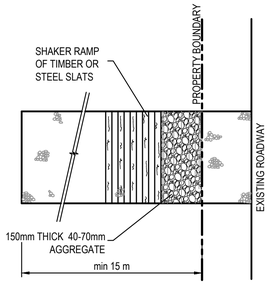

PLAN

STABILISED SITE ACCESS WITH SHAKER RAMP

N.T.S.

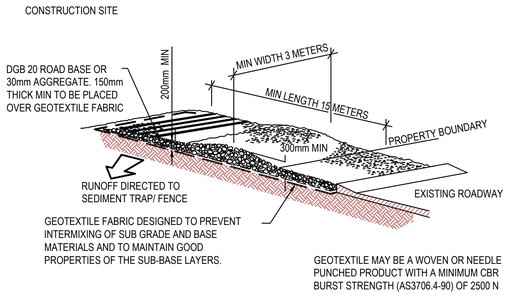

STABILISED SITE ACCESS WITH SHAKER RAMP

N.T.S.

NOTES:

1. THIS DEVICE IS TO BE LOCATED AT ALL EXITS FROM CONSTRUCTION SITE.
2. THIS DEVICE IS TO BE REGULARLY CLEANED OF DEPOSITED MATERIAL SO AS TO MAINTAIN A 50mm DEEP SPACE BETWEEN PLANKS.
3. ANY UNSEALED ROAD BETWEEN THIS DEVICE AND NEAREST ROADWAY IS TO BE TOPPED WITH 100mm THICK 40-70mm SIZE AGGREGATE.
4. ALTERNATIVELY, THREE(3) PRECAST CONCRETE CATTLE GRIDS (AS MANUFACTURED BY "HUMES CONCRETE MAY BE USED. 1, 2 & 3 ABOVE ALSO APPLY.

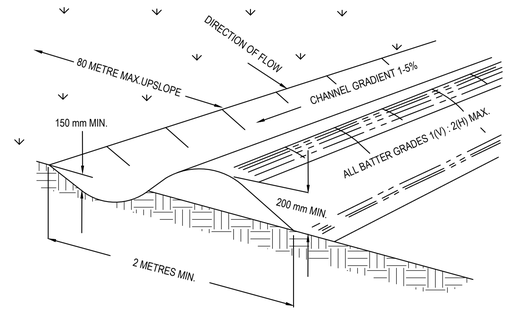

NOTE: ONLY TO BE USED AS TEMPORARY BANK WHERE MAC.UPSLOPE LENGTH IS 80 METERS.

CATCH DRAIN CONSTRUCTION NOTES:

1. CONSTRUCT ALONG GRADIENT AS SPECIFIED.
2. MAXIMUM SPACING BETWEEN BANKS SHALL BE 80 METRES.
3. DRAINS TO BE OF PARABOLIC OR TRAPEZOIDAL CROSS SECTION NOT V-SHAPED.
4. EARTH BANKS TO BE ADEQUATELY COMPACTED IN ORDER TO PREVENT FAILURE.
5. CONSTRUCTION IS OF A TEMPRORARY NATURE AND SHALL BE COMPACTED AT THE END A DAYS WORK OR IMMEDIATELY PRIOR RAIN.
6. ALL OUTLETS FROM DISTURBED LANDS ARE TO FEED INTO SEDIMENT BASIN OR SIMILAR.
7. DISCHARGE RUNOFF COLLECTED FROM UNDISTURBED LANDS ONTO EITHER A STABILISED OR AN UNDISTURBED DISPOSAL AISTE WITHIN THE SAME SUBCATCHMENT AREA FROM WHICH THE WATER ORIGINATED.
8. COMPACT WITH A SUITABLE IMPLEMENT IN SITUATIONS WHERE THEY ARE REQUIRED TO FUNCTION FOR MORE THAN FIVE DAYS.
9. EARTH BANKS TO BE FREE OF PROJECTIONS OR OTHER IRREGULARITIES THAT WILL IMPEDE NORMAL FLOW.

CATCH DRAINS SD 5-8

SCALE N.T.S.

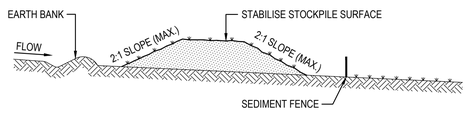

STOCKPILE CONSTRUCTION NOTES:

1. PLACE STOCKPILES MORE THAN 2 (PREFERABLY 5) METRES FROM EXISTING VEGETATION, CONCENTRATED WATER FLOW, ROADS AND HAZARD AREAS.
2. CONSTRUCT ON THE CONTOUR AS LOW, FLAT, ELONGATED MOUNDS.
3. WHERE THERE IS SUFFICIENT AREA, TOPSOIL STOCKPILES SHALL BE LESS THAN 2 METRES IN HEIGHT.
4. WHERE THEY ARE TO BE PLACED FOR MORE THAN 10 DAYS, STABILISE FOLLOWING THE APPROVED E.S.C.P. OR S.W.M.P. TO REDUCE THE C-FACTOR TO LESS THAN 0.10.
5. CONSTRUCT EARTH BANKS ON THE UPSLOPE SIDE TO DIVERT WATER AROUND STOCKPILES AND SEDIMENT FENCES 1 TO 2 METRES DOWNSLOPE.

STOCKPILES

SCALE N.T.S.

FOR DA ONLY

SURVEY INFORMATION
SURVEYED BY WATSDON BUCHAN
DATUM: A.H.D.
ORIGIN OF LEVELS: SSM 22740 RL41.10

REVISION	AMENDMENT	DRAWN	DESIGNED	DATE	REVISION	AMENDMENT	DRAWN	DESIGNED	DATE
04	ISSUED FOR DA ONLY	MB	NH	11.09.2024					
03	ISSUED FOR DA ONLY	MP	NH	16.02.2024					
02	ISSUED FOR DA ONLY	MP	NH	13.11.2023					
01	PRELIMINARY	NH	NH	16.10.2023					

Client: HBB PROPERTY
Architect: nettletontribe

This drawing and design remains the property of Henry & Hymas and may not be copied in whole or in part without the prior written approval of Henry & Hymas.

Suite 2.01
828 Pacific Highway
Gordon NSW 2072
Telephone +61 2 9417 8400
Facsimile +61 2 9417 8337
Email email@hhconsult.com.au
Web www.henryandhymas.com.au

DRAWING TO BE PRINTED IN COLOUR

henry&hymas

Project: PROPOSED COPE WAREHOUSE DEVELOPMENT
LUDDENHAM ROAD, ORCHARD HILLS NSW 2748

Title: SEDIMENT AND EROSION CONTROL DETAILS

Drawn	Designed	Date
M.Barrozo	N.Heazlewood	OCTOBER 2023
Checked	Approved	Scale @A1
N.Heazlewood	A.Francis	N.T.S.

Drawing number: 231559_DA_SE02
Revision: 04

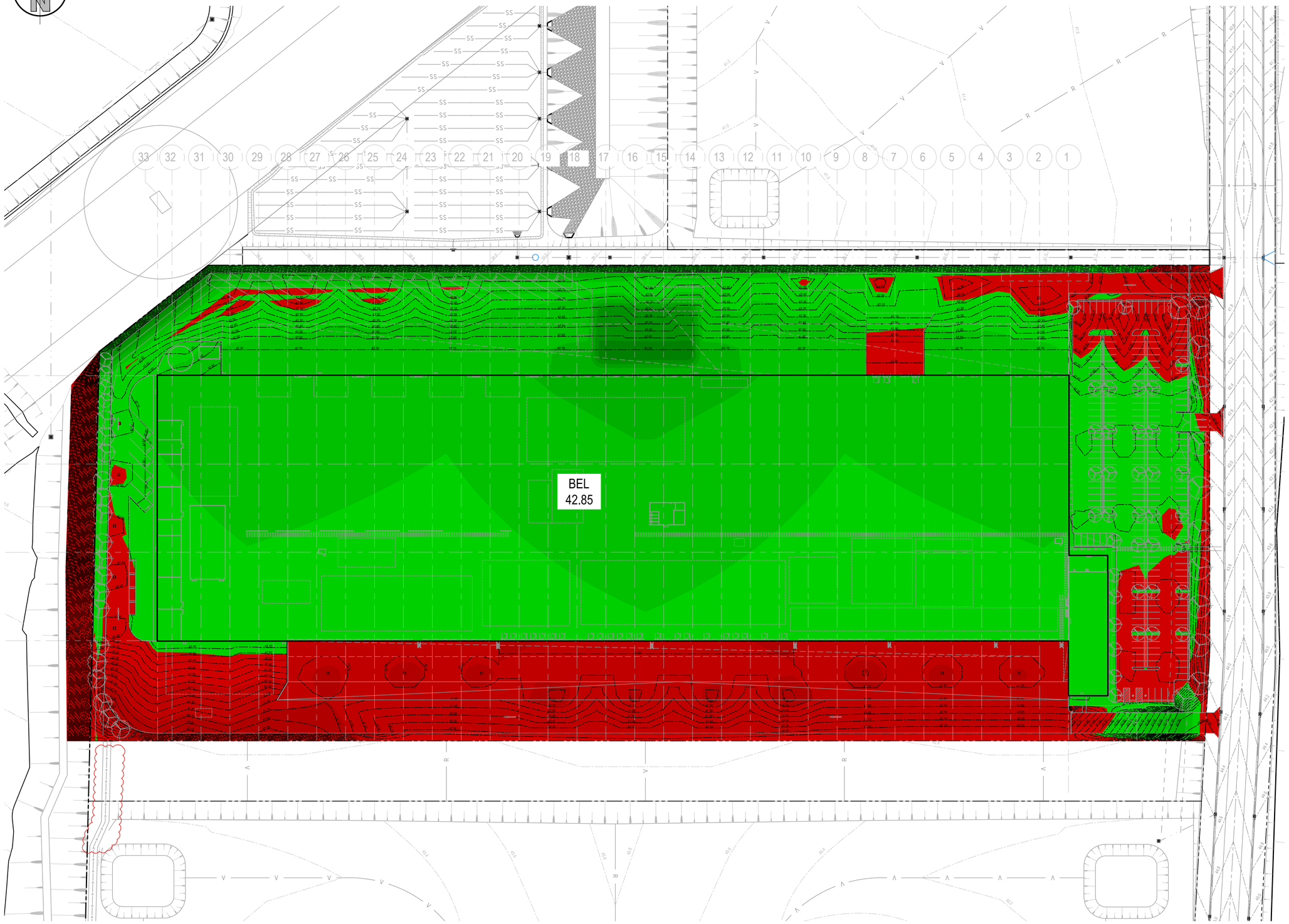

LEGEND

EXISTING BOUNDARY

52.40 BE CONTOURS

DEPTH RANGE Lower_value		Upper_value	Colour
-20	to	-10	Meters
-10	to	-8	Meters
-8	to	-7	Meters
-7	to	-6	Meters
-6	to	-5	Meters
-5	to	-4	Meters
-4	to	-3	Meters
-3	to	-2	Meters
-2	to	-1	Meters
-1	to	-.1	Meters
-.1	to	-.05	Meters
-.05	to	0	Meters
0	to	.05	Meters
.05	to	.1	Meters
.1	to	.2	Meters
.2	to	.4	Meters
.4	to	.6	Meters
.6	to	.8	Meters
.8	to	1	Meters
1	to	2	Meters
2	to	4	Meters
4	to	6	Meters
6	to	10	Meters
10	to	20	Meters

EARTHWORKS QUANTITIES

(APPROXIMATE ONLY)
NOT TO BE USED FOR CONTRACTUAL PURPOSES. TENDERERS TO DETERMINE VOLUMES USING THEIR OWN METHOD OF CALCULATION.

- EARTHWORKS QUANTITIES -	
TOTAL AREA (81,848 m²)	
CUT	13,338 m³
FILL	34,098 m³
EXCESS OF FILL OVER CUT	20,760 m³
EXCAVATION FOR SERVICE TRENCHES NOT INCLUDED IN CALCULATION	
EXCAVATION FOR RETAINING WALLS NOT INCLUDED IN CALCULATION	
NO TOPSOIL STRIPPING. BULK EARTHWORKS VOLUME CALCULATED AGAINST THE DESIGN BULK SURFACE FOR THE SUBDIVISION WORKS DA DESIGN.	

PAVEMENT THICKNESS "INCLUDING BEDDING THICKNESS"		
BUILDING SLAB	250	mm
HARDSTAND	300	mm
AC CARPARK	350	mm
LANDSCAPING	300	mm

0 15 30 45 60 75m
15 10 5
SCALE 1:750

BULK EARTH WORKS CUT & FILL PLAN

SCALE: 1:750

FOR DA ONLY

SURVEY INFORMATION
SURVEYED BY
WATSDON BUCHAN
DATUM: A.H.D.
ORIGIN OF LEVELS: SSM 22740 RL41.10

REVISION	AMENDMENT	DRAWN	DESIGNED	DATE	REVISION	AMENDMENT	DRAWN	DESIGNED	DATE
04	ISSUED FOR DA ONLY	NH	SC	14.01.2025					
03	ISSUED FOR DA ONLY	SC	SC	16.02.2024					
02	ISSUED FOR DA ONLY	AFe	NH	05.12.2023					
01	ISSUED FOR DA ONLY	MP	NH	13.11.2023					

Client
HBB PROPERTY

Architect
nettletontribe

This drawing and design remains the property of Henry & Hymas and may not be copied in whole or in part without the prior written approval of Henry & Hymas.

Suite 2.01
808 Pacific Highway
Gordon NSW 2072
Global-Mark.com.au/B
Telephone
+61 2 9417 8400
Facsimile
+61 2 9417 8337
Email
email@hhconsult.com.au
Web
www.henryandhymas.com.au

DRAWING TO BE PRINTED IN COLOUR

henry&hymas

Project
PROPOSED COPE WAREHOUSE DEVELOPMENT
LUDDENHAM ROAD, ORCHARD HILLS NSW 2748

Title
BULK EARTHWORKS CUT & FILL PLAN

Drawn	Designed	Date
M.Barrozo	N.Heazlewood	OCTOBER 2023
Checked	Approved	Scale @A1
N.Heazlewood	A.Francis	1:750

Drawing number
231559_DA_BE01

Revision
04